MIKRO 185

HAEMATOKRIT 200

EBA 200

EBA 200 S

Repair instructions

Andreas Hettich GmbH & Co. KG

Föhrenstraße 12, D-78532 Tuttlingen / Germany

Phone +49 (0)7461 / 705-0

Fax +49 (0)7461 / 705-1125

info@hettichlab.com, service@hettichlab.com

www.hettichlab.com

AR1800EN / Rev. 01

Contents

1 Introduction

- Repairs must only be carried out by personnel authorised to do so by the manufacturer.

> ⚠ Interventions and modifications at centrifuges, which have been conducted by persons not authorized by the Andreas Hettich GmbH & Co. KG company, are at their own risk and entail the loss off all guarantee and liability claims. In such an event any guarantee claim or liability claim against the Andreas Hettich GmbH & Co. KG company expire.

- Only original spare parts and original accessories licensed by the Andreas Hettich GmbH & Co. KG company are allowed to be utilised.

> ⚠ If no original spare parts or no original accessories are used, any guarantee claim or liability claim against the Andreas Hettich GmbH & Co. KG company ceases to exist.

- Information about the operation of the centrifuge please see operating instructions.
- We reserve all rights for these technical documents.

2 Symbol meanings

Symbol on the device:

Attention, general hazard area.

Symbol on the device:

Observe operating instructions.
This symbol indicates that the user must observe the operating instructions provided.

Symbol in this document:

Attention, general hazard area.
This symbol refers to safety relevant warnings and indicates possibly dangerous situations.

The non-adherence to these warnings can lead to material damage and injury to personal.

Symbol on the device:

Beware of biohazard.

Symbol in this document:

Warning! Danger for human lives by electric shock.

Symbol in this document:

This symbol refers to important circumstances.

Symbol on the device:
The symbol is on the housing, near the hinge.

Direction of rotation of the rotor.

Symbol on the device:
The symbol is located on the front of the housing, below the borehole.

The direction of rotation of the Allen key to unlock the lid in an emergency.

Symbol on the device and in this document:

Symbol for the separate collection of electric and electronic devices according to the guideline 2002/96/EG (WEEE). The device belongs to Group 8 (medical devices).

Applies in the countries of the European Union, as well as in Norway and Switzerland.

3 Disposal

Before disposal, the device must be decontaminated and cleaned to protect people, the environment and property.

When you are disposing of the device, the respective statutory rules must be observed.

Pursuant to guideline 2002/96/EC (WEEE), all devices supplied after August 13, 2005 may not be disposed as part of domestic waste. The device belongs to group 8 (medical devices) and is categorized in the business-to-business field.

The icon of the crossed-out trash can shows that the device may not be disposed as part of domestic waste.

The waste disposal guidelines of the individual EC countries might vary. If necessary, contact your supplier.

4 Description of the centrifuge

This microprocessor controlled centrifuge mainly consists of the following components:

- Control panel (A2)
- Electronics (A1)
- Motor (M1) with speed sensor (B1) and holder of the magnet for the imbalance detection
- Motor-driven lid lock (A4)

All electronic components are on mains, except the speed sensor (B1).

4.1 Control panel (A2)

The control panel (A2) have control tasks, it disposes of the following characteristics:

- Keys for input of the operation parameters.
- LCD-display
- Transmission of the signals to the electronics (A1) via the interface.
- Storing the machine version and the brake setting.
  By means of the machine version the electronics (A1) is informed which kind of centrifuge has to be controlled. Then the electronics (A1) takes the corresponding values from the ROM, e.g. max. speed, acceleration and deceleration ramps, adjusted value for the imbalance switch-off.
- Communication with the electronics (A1) via TTL interface.
- Monitoring the speed signal and the speed measurement.
  If over or under speed is detected the motor will stop.
- Status indication with a green LED:

Standby:	The LED lights up
Centrifugation run:	The LED flashes slowly
Case of error:	The LED flashes quickly

The power supply for the control panel (A2) is transmitted from the electronics (A1) via the flat ribbon cable:
Pin 1 GND
Pin 4 +5V

4.2 Electronics (A1)

The electronics (A1) is a combination of:

- Control
- Voltage supply
- Frequency converter

The electronics (A1) carries out the following tasks:

- Mains filter for suppressing interference voltages (for EBA 200 only).
- Rectification and smoothing of the mains voltage (for EBA 200 only).
- Power supply for the speed sensor (B1).
  15 V, DC (EBA 200)
  5 V, DC (EBA 200 S, HAEMATOKRIT 200, MIKRO 185)
- Power supply 5 V, DC for the control panel (A2).
- Control of the motor:
  - Generating the motor power supply
    (three-phase current with variable frequency and voltage)

    Functional description: **EBA 200:**
    The mains voltage is rectified, smoothened and chopped into a pulse-width pattern in three bridge elements with a microprocessor.

    EBA 200 S, HAEMATOKRIT 200, MIKRO 185:
    The mains voltage, rectified and smoothed by the electronics (A3), is chopped into a pulse-width pattern in three bridge elements with a microprocessor.
  - Monitoring the motor current.
  - Evaluating the speed sensor pulses (1 pulse per revolution).
    If over or under speed is detected the motor will stop.
  - Evaluating the overtemperature switch in the motor (M1).
- Evaluating the imbalance sensor.
- Controlling the motor-driven lid lock (A4).
- Communication with the control panel (A2) via TTL interface.
- Error evaluation.

- Status indication with a yellow LED:

  Standby, centrifugation run: The LED lights up
  Case of error: The LED flashes with specific errors

4.3 Electronics (A3)
(for EBA 200 S, HAEMATOKRIT 200, MIKRO 185 only)

The electronics have the following properties:
- Appliance plug with on/off switch and fuses.
- Mains filter for suppressing interference voltages.
- Rectification and smoothing of the mains voltage.

4.4 Motor (M1) / Speed sensor (B1)

- The motor is a 2-pole three-phase asynchronous motor (1 pair of poles).
- The motor is protected against overheating by an overtemperature switch. The overtemperature switch is integrated in the motor and cannot be replaced.
- The electronics (A1) evaluates the overtemperature switch.
- The speed sensor (B1, speedometer) is screwed to the bottom of the motor. The speed signal (1 pulse per revolution) will be triggered by a magnet located in the motor axle.
- The electronics (A1) monitors and controls the speed of the motor.
- In addition the speed of the motor is also monitored by the electronics (A2).
- The holder of the magnet for the imbalance detection is attached to the motor.

4.5 Motor-driven lid lock (A4)

- The lid can be opened only if the electronics (A1) has detected rotor standstill.
- After pressing the key STOP OPEN the lid opens motor-driven.
- The centrifugation run can only be started when the lid is closed and the lid lock has locked. A microswitch on the lid lock detects the position of the lid lock (open/closed) and report it to the electronics (A1).

4.6 Imbalance detection

- An hall sensor monitors the imbalance. This hall sensor is located on the electronics (A1).
- The magnet for the imbalance detection is located in a holder which is attached to the motor. The holder is placed in such a way that the magnet is located directly above the hall sensor.
- Imbalance is detected only in running mode (run up, centrifuging and braking).
- If impermissible imbalance is detected, the motor switches off and the rotor slows down braked until it stops.

5 Troubleshooting procedures

- Fuses in installation in which centrifuge is installed are intact.
- Mains input fuses of centrifuge are intact.
- Mains voltage present at (see connecting diagram):
  EBA 200:
  - Connecting cable
  - Appliance plug/mains switch
  - Electronics (A1), plug S102L and S102N

  EBA 200 S, HAEMATOKRIT 200, MIKRO 185:
  - Connecting cable
  - Appliance plug/mains switch on the electronics (A3), plug SL1 and SN1
  - Electronics (A1), plug S100, pin 1 (L1) and pin 3 (N)
- Look for the displayed error message in chapter 6 on page 9.
- Remedy the error according to the instructions.
- Carry out a functional check after every repair and whenever a component is replaced, see pg. 49, chapter 8.

6 Error messages

6.1 Perform a MAINS RESET

- Switch off the mains switch (switch position "0").
- Wait for at least 10 seconds and then switch the mains switch back on (switch position "I").

6.2 Brief description

Error designation	No.	Brief description	Page
---	---	No display.	11
TACHO ERROR	1	Speed pulse failure during the centrifugation run	11
TACHO ERROR	2	After the start command, there are no speed pulses.	11
LID ERROR	4.1	Lid lock error	12
LID ERROR	4.2	Lid lock error	12
LID ERROR	4.3	Lid lock error	12
LID ERROR	4.4	Lid lock error	12
LID ERROR	4.5	Lid lock error	12
LID ERROR	4.6	Lid lock error	12
LID ERROR	4.7	Lid lock error	12
LID ERROR	4.8	Lid lock error	12
LID ERROR	4.9	Lid lock error	12
LID ERROR	4.10	Lid lock error	13
LID ERROR	4.126	Lid lock error	12
LID ERROR	4.127	Lid lock error	12
OVER SPEED	5	Overspeed	13
MAINS INTERRUPT		Mains interruption during the centrifugation run	13
MAINS INTER	11	Mains interruption during the centrifugation run	13
VERSION ERROR	12	Incorrect centrifuge model recognized	13
UNDER SPEED	13	Underspeed	14
CTRL ERROR	25.1	Control panel error: EEPROM	14
CTRL ERROR	25.2	Control panel error: EEPROM	14
CRC ERROR	27.1	Control panel error: ROM	14
COM ERROR	31	No connection between the frequency converter on the electronics (A1) and the serial interface	14
COM ERROR	34	No correct data transmission between the control panel and the frequency converter on the electronics (A1)	14
COM ERROR	36	No response (NAK) from the frequency converter on the electronics (A1) to the control panel	14
FC ERROR	60	Faulty enable signal to the frequency converter on the electronics (A1)	15
FC ERROR	61.1	Error of the frequency converter on the electronics (A1): Undervoltage	15
FC ERROR	61.2	Error of the frequency converter on the electronics (A1): Overvoltage	15
FC ERROR	61.4	Error of the frequency converter on the electronics (A1): Overtemperature in the frequency converter	15
FC ERROR	61.5	Error of the frequency converter on the electronics (A1): Overtemperature in the motor	16

Error designation	No.	Brief description	Page
FC ERROR	61.9	Error of the frequency converter on the electronics (A1): Overcurrent	17
FC ERROR	61.10	Error of the frequency converter on the electronics (A1): Overcurrent	17
FC ERROR	61.13	Error of the frequency converter on the electronics (A1): Overcurrent	17
FC ERROR	61.16	Faulty enable signal to the frequency converter on the electronics (A1)	15
FC ERROR	61.17	No communication between the control panel and the frequency converter on the electronics (A1)	14
FC ERROR	61.18	Frequency converter on the electronics (A1) receives an incorrect direction of rotation command	17
FC ERROR	61.19	Frequency converter on the electronics (A1) detects overspeed	18
FC ERROR	61.20	Faulty speed measurement of the frequency converter on the electronics (A1)	18
FC ERROR	61.21	Frequency converter on the electronics (A1) detects underspeed	18
TACHO ERR	61.22	Frequency converter on the electronics (A1) is not receiving any speed pulses	11
FC ERROR	61.23	Speed measurement faulty	11
FC ERROR	61.64	Internal error of the frequency converter on the electronics (A1)	19
FC ERROR	61.128	Internal error of the frequency converter on the electronics (A1)	19
FC ERROR	61.129	Internal error of the frequency converter on the electronics (A1)	19
FC ERROR	61.131	Internal error of the frequency converter on the electronics (A1)	19
FC ERROR	61.132	Internal error of the frequency converter on the electronics (A1)	19
FC ERROR	61.140	Internal error of the frequency converter on the electronics (A1)	19
FC ERROR	61.141	Internal error of the frequency converter on the electronics (A1)	19
FC ERROR	61.142	Internal error of the frequency converter on the electronics (A1)	19
IMBALANCE		Imbalance on the motor axis	19
FC ERROR	61.153	Error of the frequency converter on the electronics (A1): Imbalance system is faulty	19

6.3 Error description and remedy

All electronic components are at mains potential with the exception of the speed sensor (B1).

No display

- **Error description:**
  No display.

- **Cause of error:**
  - No mains voltage.
    Check fuses of in-house installation.
  - Mains input fuses (F1, F2) in the appliance plug are defective.
    Check the mains input fuses.
  - Mains switch in the appliance plug is defective.
    Mains voltage measurement:
    EBA 200: on plugs S102L and S102N / electronics (A1).
    EBA 200 S, HAEMATOKRIT 200, MIKRO 185: on plugs SL1 and SN1 / electronics (A3).
  - Electronics (A3) is defective (only for EBA 200 S, HAEMATOKRIT 200, MIKRO 185).
    Measurement of the mains voltage on the plug S100 / electronics (A1), Pin 1 (L1) and Pin 3 (N).
  - Electronics (A1) is defective.
    The yellow LED on the electronics (A1) must be illuminated or flashing.
  - Control panel (A2) is defective.

TACHO ERROR 1, TACHO ERROR 2, TACHO ERR 61.22, FC ERROR 61.23

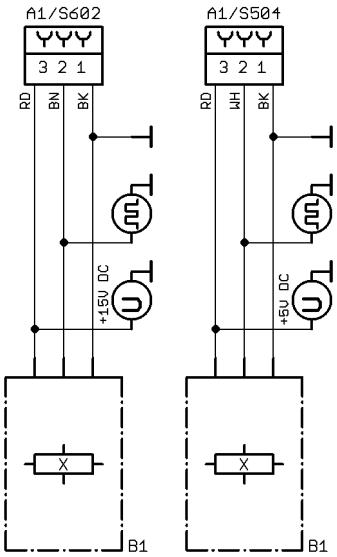

- **Error description:**
  - **TACHO ERROR 1:**
    During the centrifugation run, the control panel (A2) no longer receives speedometer pulses from the speed sensor (B1).
  - **TACHO ERROR 2:**
    After starting the centrifugation run, the control panel (A2) receives no speedometer pulses from the speed sensor (B1).
  - **TACHO ERR 61.22:**
    During the centrifugation run, the electronics (A1) no longer receives speedometer pulses from the speed sensor (B1).
  - **FC ERROR 61.23:**
    During the centrifugation run, the speed measurement on the electronics (A1) detected an impermissible speed deviation.

- **Clear error message:**
  Wait until the rotor has come to a standstill and the symbol (lid locked) is displayed. Afterwards, carry out a MAINS RESET.

- **Cause of error:**
  - Speed sensor (B1) defective or loose contact.
    Check the function of the speed sensor (B1); see chapter 7.4.4.
    Measurement on plug S602 or S504 / electronics (A1):
    ☞ Plug S602: EBA 200
    Plug S504: EBA 200 S, HAEMATOKRIT 200, MIKRO 185
    Operating voltage:
    Pin 1 – Pin 3 +15 VDC (EBA 200)
    +5 VDC (EBA 200 S, HAEMATOKRIT 200, MIKRO 185)
    Speedometer pulses: Pin 1 – Pin 2 (signal). Slowly rotate the rotor by hand.
  - Loose contact on the plug S601 or S501 / electronics (A1).
    ☞ Plug S601: EBA 200
    Plug S501: EBA 200 S, HAEMATOKRIT 200, MIKRO 185
  - Control panel (A2) is defective (not with error messages **TACHO ERR 61.22** and **FC ERROR 61.23**).
  - Electronics (A1) is defective.

LID ERROR 4.1, LID ERROR 4.127

- **Error description:**
  The lid is not locked. The lid lock is not actuated or it jams during locking.

- **Clear error message:**
  Carry out a MAINS RESET.

- **Cause of error:**
  – Lid lock (A4) is defective.
  – Electronics (A1) is defective.

LID ERROR 4.2, LID ERROR 4.3

- **Error description:**
  The lid lock is not actuated.

- **Clear error message:**
  Carry out a MAINS RESET.

- **Cause of error:**
  Electronics (A1) is defective.

LID ERROR 4.4, LID ERROR 4.6,
LID ERROR 4.7, LID ERROR 4.9

- **Error description:**
  – **LID ERROR 4.4:**
    The lid lock jams during locking.
  – **LID ERROR 4.6, LID ERROR 4.7, LID ERROR 4.9:**
    The lid lock jams during unlocking.

- **Clear error message:**
  Carry out a MAINS RESET.

- **Cause of error:**
  Lid lock (A4) is defective.

LID ERROR 4.5, LID ERROR 4.8,
LID ERROR 4.126

- **Error description:**
  The microswitch in the lid lock opens during the centrifugation run.

- **Clear error message:**
  Carry out a MAINS RESET.

- **Cause of error:**
  – An emergency unlocking is carried out by hand during the centrifugation run.
  – Lid lock (A4) is defective.

LID ERROR 4.10

- **Error description:**
  Unknown lid lock type.

- **Clear error message:**
  Carry out a MAINS RESET.

- **Cause of error:**
  – Lid lock (A4) is defective.
  – Control panel (A2) is defective.

OVER SPEED 5

- **Error description:**
  Overspeed. The speed measurement function on the control panel (A2) detects an overspeed. Unbraked run-down of the rotor until it comes to a standstill.

- **Clear error message:**
  After the rotor has come to a standstill, carry out a MAINS RESET.

- **Cause of error:**
  – Loose contact on the plug S602 or S504 / electronics (A1).
  ☞ Plug S602: EBA 200
  Plug S504: EBA 200 S, HAEMATOKRIT 200, MIKRO 185
  – Loose contact on the plug S601 or S501 / electronics (A1).
  ☞ Plug S601: EBA 200
  Plug S501: EBA 200 S, HAEMATOKRIT 200, MIKRO 185
  – Electronics (A1) is defective.
  – Control panel (A2) is defective.

MAINS INTERRUPT, MAINS INTER 11

- **Error description:**
  Mains interruption during the centrifugation run.

- **Clear error message:**
  After the rotor has come to a standstill, open the lid and then press the START PULSE key.
  ☞ The error message cannot be cleared with a MAINS RESET.

- **Cause of error:**
  – Mains voltage failure.
  – Loose contact in the electrical lines.
  – Loose contact on the plug S601 or S501 / electronics (A1).
  ☞ Plug S601: EBA 200
  Plug S501: EBA 200 S, HAEMATOKRIT 200, MIKRO 185

VERSION ERROR 12

- **Error description:**
  The centrifuge model and centrifuge type which are saved in the control panel (A2) do not match the electronics (A1).

- **Clear error message:**
  Carry out a MAINS RESET.

- **Cause of error:**
  – An incorrect centrifuge model and incorrect centrifuge type are saved in the control panel (A2).
  In the "SELECT MENU", set the correct centrifuge model and the correct centrifuge type; see chapter 7.4.1.
  – Control panel (A2) is defective.

UNDER SPEED 13

- **Error description:**
  Underspeed. The speed measurement function on the control panel (A2) detects an underspeed. Unbraked run-down of the rotor until it comes to a standstill.

- **Clear error message:**
  After the rotor has come to a standstill, carry out a MAINS RESET.

- **Cause of error:**
  - Loose contact on the plug S602 or S504 / electronics (A1).
    ☞ Plug S602: EBA 200
    Plug S504: EBA 200 S, HAEMATOKRIT 200, MIKRO 185
  - Loose contact on the plug S601 or S501 / electronics (A1).
    ☞ Plug S601: EBA 200
    Plug S501: EBA 200 S, HAEMATOKRIT 200, MIKRO 185
  - Electronics (A1) is defective.
  - Control panel (A2) is defective.

CTRL ERROR 25.1, CTRL ERROR 25.2,
CRC ERROR 27.1

- **Error description:**
  - **CTRL ERROR 25.1, CTRL ERROR 25.2:**
    EEPROM: Read or memory error. The device can no longer be operated.
  - **CRC ERROR 27.1:**
    ROM: Read error. The device can no longer be operated.

- **Clear error message:**
  Carry out a MAINS RESET.

- **Cause of error:**
  Control panel (A2) is defective.

COM ERROR 31, COM ERROR 34,
COM ERROR 36, FC ERROR 61.17

- **Error description:**
  Error in the communication of the control panel (A2) with the frequency converter on the electronics (A1) via the serial interface.

- **Clear error message:**
  Carry out a MAINS RESET.

- **Cause of error:**
  - Loose contact on the plug S601 or S501 / electronics (A1).
    ☞ Plug S601: EBA 200
    Plug S501: EBA 200 S, HAEMATOKRIT 200, MIKRO 185
  - Overtemperature switch in the motor (M1) is open (only with error message **COM ERROR 36**).
    Check the overtemperature switch; see error message **FC ERROR 61.5**.
  - Electronics (A1) is defective.
  - Control panel (A2) is defective.

FC ERROR 60, FC ERROR 61.16

- **Error description:**
  The enable signal was not correctly transmitted to the frequency converter on the electronics (A1). The device can no longer be operated.

- **Clear error message:**
  Carry out a MAINS RESET.

- **Cause of error:**
  - Loose contact on the plug S601 or S501 / electronics (A1).
    ☞ Plug S601: EBA 200
    Plug S501: EBA 200 S, HAEMATOKRIT 200, MIKRO 185
  - Control panel (A2) is defective.
  - Electronics (A1) is defective.

FC ERROR 61.1

- **Error description:**
  Frequency converter error on the electronics (A1): Undervoltage in the intermediate circuit. Unbraked run-down of the rotor until it comes to a standstill. The device can no longer be operated.

- **Clear error message:**
  Carry out a MAINS RESET.

- **Cause of error:**
  - Mains voltage too low. For permissible mains voltage, see chapter 12.3.
  - Electronics (A3) is defective (only for EBA 200 S, HAEMATOKRIT 200, MIKRO 185).
    Measurement of the intermediate circuit voltage (approx. 325 V DC) on plug S100 / electronics (A1), Pin 5 (+) and Pin 7 (Gnd).
  - Electronics (A1) is defective.

FC ERROR 61.2

- **Error description:**
  Frequency converter error on the electronics (A1): Overvoltage in the intermediate circuit. The voltage in the intermediate circuit is > 410 V DC. This error usually happens only when braking the motor.
  Unbraked run-down of the rotor until it comes to a standstill. The device can no longer be operated.

- **Clear error message:**
  Carry out a MAINS RESET.

- **Cause of error:**
  - Mains voltage is too high. For permissible mains voltage, see chapter 12.3.
  - Electronics (A1) is defective.

FC ERROR 61.4

- **Error description:**
  Overtemperature in the frequency converter on the electronics (A1). Unbraked run-down of the rotor until it comes to a standstill. The device can no longer be operated.

- **Clear error message:**
  Carry out a MAINS RESET.

- **Cause of error:**
  - The heat dissipation from the frequency converter to the centrifuge housing is insufficient.
  - Full-load operation at an ambient temperature of > 45°C.
  - Electronics (A1) is defective.

FC ERROR 61.5

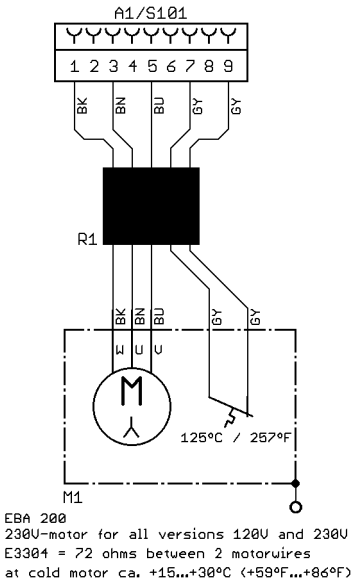

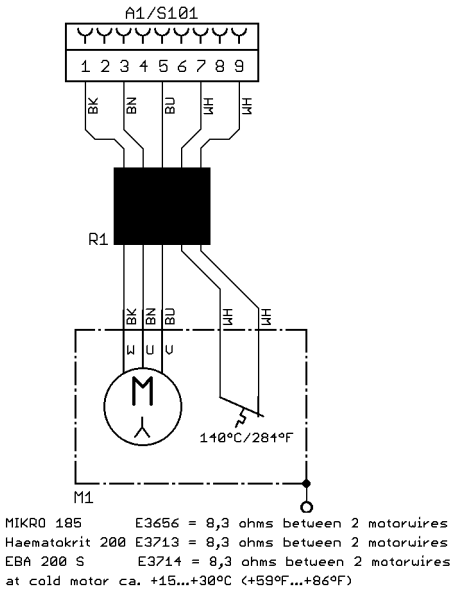

- **Error description:**
  Overtemperature in the motor. The device can no longer be operated.

- **Clear error message:**
  Carry out a MAINS RESET.

- **Cause of error:**
  - The overtemperature switch in the motor opens due to an excessive motor temperature.
    ☞ The reset time of the overtemperature switch can take up to 10 minutes.

    ⚠ On the electronics (A1) on plug S101, there is a voltage of approx. 325 V DC.

    Unplug the plug S101 / electronics (A1) and measure between Pin 7 and Pin 9 on the plug of the cable:
    Switch closed: $\approx 0\ \Omega$
    Switch open (overtemperature): $\infty\ \Omega$
    ☞ The overtemperature switch is built into the motor and cannot be exchanged individually. In the case of a defective overtemperature switch, the motor must be exchanged.
  - Loose contact on the plug or S101 / electronics (A1).
  - Electronics (A1) is defective.
  - Motor is defective.

FC ERROR 61.9, FC ERROR 61.10,
FC ERROR 61.13

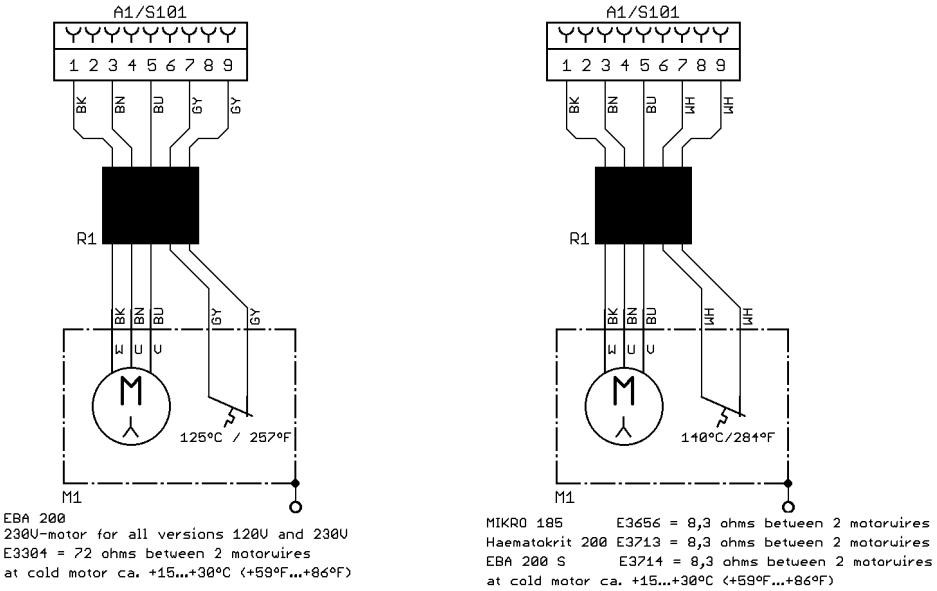

- **Error description:**
  Internal error of the frequency converter on the electronics (A1). The device can no longer be operated.

- **Clear error message:**
  Carry out a MAINS RESET.

- **Cause of error:**
  – Short-circuit in the motor.

  On the electronics (A1) on plug S101, there is a voltage of approx. 325 V DC.

  Unplug plug S101 and check the winding resistances of the motor at Pin 1, Pin 3 and Pin 5 on the cable plug. For resistance values of the various motors, see the above figure.
  – Electronics (A1) is defective.

FC ERROR 61.18

- **Error description:**
  The frequency converter on the electronics (A1) receives an incorrect direction of rotation command The device can no longer be operated.

- **Clear error message:**
  Carry out a MAINS RESET.

- **Cause of error:**
  Control panel (A2) is defective.

FC ERROR 61.19, FC ERROR 61.20

- **Error description:**
  - **FC ERROR 61.19:**
    The frequency converter on the electronics (A1) detects overspeed Braked run-down of the rotor until it comes to a standstill. The device can no longer be operated.
  - **FC ERROR 61.20:**
    The speed measurement of the frequency converter on the electronics (A1) is faulty. Braked run-down of the rotor until it comes to a standstill. The device can no longer be operated.

- **Clear error message:**
  Wait until the rotor has come to a standstill and the symbol (lid locked) is displayed. Afterwards, carry out a MAINS RESET.

- **Cause of error:**
  - Loose contact on the plug S602 or S504 / electronics (A1).
    Plug S602: EBA 200
    Plug S504: EBA 200 S, HAEMATOKRIT 200, MIKRO 185
  - The insulation is damaged on the cable of the speed sensor (B1).
  - Loose contact on the plug S601 or S501 / electronics (A1).
    Plug S601: EBA 200
    Plug S501: EBA 200 S, HAEMATOKRIT 200, MIKRO 185
  - Control panel (A2) is defective.
  - Electronics (A1) is defective.

FC ERROR 61.21

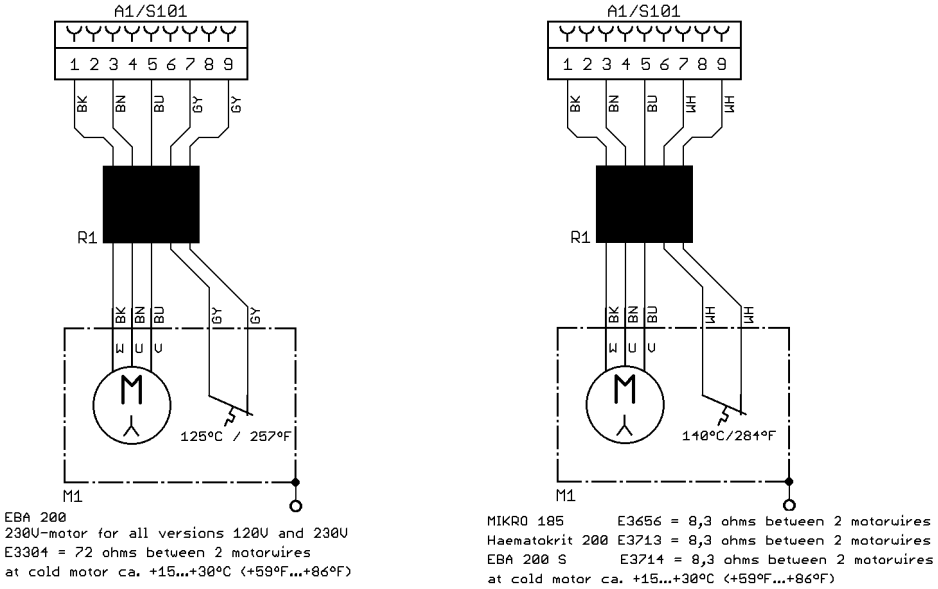

- **Error description:**
  The frequency converter on the electronics (A1) detects underspeed. Unbraked run-down of the rotor until it comes to a standstill. The device can no longer be operated.

- **Clear error message:**
  Wait until the rotor has come to a standstill and the symbol (lid locked) is displayed. Afterwards, carry out a MAINS RESET.

- **Cause of error:**
  - Motor is sluggish (bearing damage).
  - Motor has a winding short-circuit (winding defective).

    On the electronics (A1) on plug S101, there is a voltage of approx. 325 V DC.

    Unplug plug S101 and check the winding resistances of the motor at Pin 1, Pin 3 and Pin 5 on the cable plug. For resistance values of the various motors, see the above figure.
  - Electronics (A1) is defective.
  - Loose contact on the plug S602 or S504 / electronics (A1).
    Plug S602: EBA 200
    Plug S504: EBA 200 S, HAEMATOKRIT 200, MIKRO 185

FC ERROR 61.64, FC ERROR 61.128,
FC ERROR 61.129, FC ERROR 61.131,
FC ERROR 61.132, FC ERROR 61.140,
FC ERROR 61.141, FC ERROR 61.142

- **Error description:**
  Internal error of the frequency converter.

- **Clear error message:**
  Carry out a MAINS RESET.

- **Cause of error:**
  Electronics (A1) is defective.

IMBALANCE

- **Error description:**
  An impermissible imbalance was detected. Braked run-down of the rotor until it comes to a standstill.

- **Clear error message:**
  Wait until the rotor has come to a standstill and the symbol (lid locked) is displayed. Afterwards, unlock the lid or carry out a MAINS RESET.

- **Cause of error:**
  - The rotor is unevenly loaded.
  - The three rubber/metal bearings on the motor are damaged. Check the three rubber/metal bearings for wear or cracks.
  - The imbalance switch-off is maladjusted. Adjust the imbalance switch-off; see chapter 7.4.2.
  - Electronics (A1) is defective.

FC ERROR 61.153

- **Error description:**
  The imbalance system is not in working order.

- **Clear error message:**
  Carry out a MAINS RESET.

- **Cause of error:**
  - There is no holder with magnet fastened to the motor for detecting imbalance.
  - The magnet for detecting imbalance is defective or is no longer in the holder.
  - The holder is placed such that the magnet is no longer above the hall sensor.
  - Electronics (A1) is defective.
  - The three rubber/metal bearings on the motor are so damaged that the magnet is no longer above the hall sensor.

7 Settings and queries

All settings and queries are carried out via the keyboard.
The corresponding menus are selected by pressing keys or key combinations.

7.1 Special displays

The following system information can be queried:

- Speed values of the speed sensor
- Current imbalance value
- Maximum imbalance value of the last centrifugation run
- Imbalance limit value
- Temperature in the frequency converter
- Value of the intermediate circuit voltage

With the rotor at a standstill and during the centrifugation run, the query can proceed as follows:

> ☞ The procedure can be aborted at any time by pressing the STOP OPEN key.

RPM/RCF ▲ ▼

- Keep both keys pressed for 8 seconds.
  Speed values:
  T : Speed value of the speed sensor
  F : Field speed

  ☞ Slippage = (F) – (T)

When rotor at a standstill:

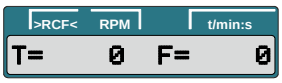

During the centrifugation run.
Example:

↓

RPM/RCF ▲

- Press the key.
  Imbal act : Current imbalance value.

  ☞ ▲ : scroll forwards.
  ▼ : scroll backwards.

↓

RPM/RCF ▲

- Press the key.
  Imbal max : Maximum imbalance value of the last centrifugation run.

↓

RPM/RCF ▲

- Press the key.
  Imbal lim : Imbalance limit value

↓

RPM/RCF ▲

- Press the key.
  Temperature in the frequency converter.

↓

RPM/RCF ▲

- Press the key.
  Value of the intermediate circuit voltage.

↓

STOP OPEN

- Press the key to exit the special display.

Example:

7.2 MACHINE MENU

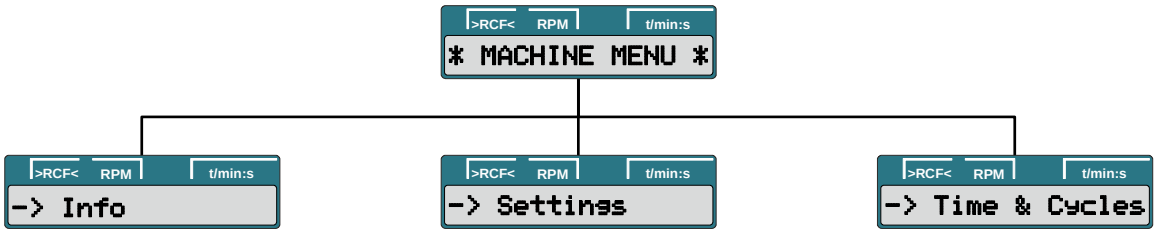

Query:

- System information (chapter 7.2.1)

Setting:

- Acoustic signal (chapter 7.2.2)
- Automatic unlocking of the lid after the centrifugation run (chapter 7.2.4)
- Automatic switch-off of the background lighting. (chapter 7.2.5)
- Optical signal after ending the centrifugation run (chapter 7.2.3)

Query:

- Number of completed centrifugation runs (chapter 7.2.6)

Setting:

- Hours of operation (chapter 7.2.6)
- Switching the cycle counter on or off and setting the maximum permissible number of run cycles (chapter 7.2.7)
- Resetting the cycle counter to zero (chapter 7.2.8)

7.2.1 Querying system information

The following system information can be queried:

- Centrifuge model
- Centrifuge program version
- Frequency converter type
- Frequency converter program version

With the rotor at a standstill, the query can proceed as follows:

> The procedure can be aborted at any time by pressing the STOP/OPEN key.

SELECT

- Press and hold the button for eight seconds.

>RCF< RPM t/min:s
* MACHINE MENU *

↓

SELECT

- Press the key.

>RCF< RPM t/min:s
-> Info

↓

START/PULSE

- Press the key.
  Centrifuge model.

Example:

>RCF< RPM t/min:s
EBA 200

Example:

>RCF< RPM t/min:s
EBA 200S

↓

SELECT

- Press the key.
  Centrifuge program version.

Example:

>RCF< RPM t/min:s
CP FW = V1.00

↓

SELECT

- Press the key.
  Frequency converter type.

Example:

>RCF< RPM t/min:s
FC type LC 300VA

↓

SELECT

- Press the key.
  Frequency converter program version.

Example:

>RCF< RPM t/min:s
FC FW = D 1.00

↓

STOP/OPEN

- Press the key twice to exit the "-> Info" menu or press three times to exit the "* MACHINE MENU *".

>RCF< RPM t/min:s
* MACHINE MENU *

Example:

>RCF< RPM t/min:s
4500 5:00

7.2.2 Acoustic signal

The acoustic signal sounds:

- after a malfunction occurs in a 2-second interval.
- after ending the centrifugation run and the rotor is at a standstill in a 30-second interval.

The acoustic signal is ended by pressing any key.

If the rotor is at a standstill, the acoustic signal can be set as follows:

> The procedure can be aborted at any time by pressing the STOP OPEN key. In this case, the settings are not stored.

SELECT

- Press and hold the button for eight seconds.

>RCF< RPM t/min:s
* MACHINE MENU *

↓

SELECT

- Press the key until the following is displayed.

>RCF< RPM t/min:s
-> Settings

↓

START PULSE

- Press the key.
  End beep : Acoustic signal after ending the centrifugation run.
  off : Signal deactivated.
  on : Signal activated.

>RCF< RPM t/min:s
End beep =off

>RCF< RPM t/min:s
End beep =on

↓

t ▲ ▼

- With the keys, set **off** or **on**.

>RCF< RPM t/min:s
End beep =off

>RCF< RPM t/min:s
End beep =on

↓

SELECT

- Press the key.
  Error beep : Acoustic signal after a malfunction occurs.
  off : Signal deactivated.
  on : Signal activated.

>RCF< RPM t/min:s
Error beep =off

>RCF< RPM t/min:s
Error beep =on

↓

t ▲ ▼

- With the keys, set **off** or **on**.

>RCF< RPM t/min:s
Error beep =off

>RCF< RPM t/min:s
Error beep =on

↓

SELECT

- Press the key.
  Beep volume : Volume of the acoustic signal.
  min : soft
  mid : medium
  max : loud

>RCF< RPM t/min:s
Beep volume =min

>RCF< RPM t/min:s
Beep volume =max

>RCF< RPM t/min:s
Beep volume =mid

↓

t ▲ ▼

- With the keys, set **min**, **mid**, or **max**.

>RCF< RPM t/min:s
Beep volume =min

>RCF< RPM t/min:s
Beep volume =max

>RCF< RPM t/min:s
Beep volume =mid

↓

Continued on next page

START PULSE

- Press the button to save the setting.

>RCF< RPM t/min:s
Store setting...

>RCF< RPM t/min:s
-> Settings

↓

STOP OPEN

- Press the key once to exit the "-> Settings" menu or press twice to exit the "* MACHINE MENU *".

>RCF< RPM t/min:s
* MACHINE MENU *

Example:

>RCF< RPM t/min:s
4500 5:00

7.2.3 Optical signal after ending the centrifugation run

The backlighting of the display flashes after the centrifugation run to visually signalize that the centrifugation run has finished.

The optical signal can be switched on or off when the rotor is at a standstill:

> The procedure can be aborted at any time by pressing the STOP OPEN key.

SELECT

- Press and hold the button for eight seconds.

>RCF< RPM t/min:s
* MACHINE MENU *

↓

SELECT

- Press the key until the following is displayed.

>RCF< RPM t/min:s
-> Settings

↓

START PULSE

- Press the key.

>RCF< RPM t/min:s
End beep =off

>RCF< RPM t/min:s
End beep =on

↓

SELECT

- Press the key until one of the following is displayed:
  End blinking : Backlighting of display flashes after the centrifugation run.
  off : Backlighting does not flash.
  on : Backlighting flashes.

>RCF< RPM t/min:s
End blinking=off

>RCF< RPM t/min:s
End blinking=on

↓

t ▲ ▼

- With the keys, set **off** or **on**.

>RCF< RPM t/min:s
End blinking=off

>RCF< RPM t/min:s
End blinking=on

↓

START PULSE

- Press the button to save the setting.

>RCF< RPM t/min:s
Store setting...

>RCF< RPM t/min:s
-> Settings

↓

STOP OPEN

- Press the key once to exit the "-> Settings" menu or press twice to exit the "* MACHINE MENU *".

>RCF< RPM t/min:s
* MACHINE MENU *

Example:

>RCF< RPM t/min:s
4500 5:00

7.2.4 Automatic unlocking of the lid after the centrifugation run

It can be set whether the lid should automatically unlock or not after the centrifugation run.

With the rotor at a standstill, this can be set as follows:

> The procedure can be aborted at any time by pressing the STOP OPEN key. In this case, the settings are not stored.

SELECT

- Press and hold the button for eight seconds.

>RCF< RPM t/min:s
* MACHINE MENU *

↓

SELECT

- Press the key until the following is displayed.

>RCF< RPM t/min:s
-> Settings

↓

START PULSE

- Press the key.

>RCF< RPM t/min:s
End beep =off

>RCF< RPM t/min:s
End beep =on

↓

SELECT

- Press the key until one of the following is displayed:
  Lid AutoOpen : Automatic unlocking of the lid after the centrifugation run.
  off : Lid does not unlock automatically.
  on : Lid unlocks automatically.

>RCF< RPM t/min:s
Lid AutoOpen=off

>RCF< RPM t/min:s
Lid AutoOpen=on

↓

t ▲ ▼

- With the keys, set **off** or **on**.

>RCF< RPM t/min:s
Lid AutoOpen=off

>RCF< RPM t/min:s
Lid AutoOpen=on

↓

START PULSE

- Press the button to save the setting.

>RCF< RPM t/min:s
Store setting...

>RCF< RPM t/min:s
-> Settings

↓

STOP OPEN

- Press the key once to exit the "-> Settings" menu or press twice to exit the "* MACHINE MENU *".

>RCF< RPM t/min:s
* MACHINE MENU *

Example:

>RCF< RPM t/min:s
4 4500 5:00

7.2.5 Backlighting of the display

To save energy, it can be set that, after a centrifugation run, the backlighting of the display switches off after 2 minutes.

With the rotor at a standstill, this can be set as follows:

> The procedure can be aborted at any time by pressing the STOP OPEN key. In this case, the settings are not stored.

SELECT

- Press and hold the button for eight seconds.

>RCF< RPM t/min:s
* MACHINE MENU *

↓

SELECT

- Press the key until the following is displayed.

>RCF< RPM t/min:s
-> Settings

↓

START PULSE

- Press the key.

>RCF< RPM t/min:s
End beep =off

>RCF< RPM t/min:s
End beep =on

↓

SELECT

- Press the key until one of the following is displayed:
  Power save : Automatic shutdown of the backlighting.
  off : Automatic shutdown deactivated.
  on : Automatic shutdown activated.

>RCF< RPM t/min:s
Power save =off

>RCF< RPM t/min:s
Power save =on

↓

t ▲ ▼

- With the keys, set **off** or **on**.

>RCF< RPM t/min:s
Power save =off

>RCF< RPM t/min:s
Power save =on

↓

START PULSE

- Press the button to save the setting.

>RCF< RPM t/min:s
Store setting...

>RCF< RPM t/min:s
-> Settings

↓

STOP OPEN

- Press the key once to exit the "-> Settings" menu or press twice to exit the "* MACHINE MENU *".

>RCF< RPM t/min:s
* MACHINE MENU *

Example:

>RCF< RPM t/min:s
4500 5:00

7.2.6 Querying and setting the hours of operation and querying the number of centrifugation runs

The hours of operation are divided into internal and external hours of operation.
Internal hours of operation: Total time the device was switched on.
External hours of operation: Total time of the previous centrifugation runs.

With the rotor at a standstill, the query and setting can be carried out as follows :

> ☞ The procedure can be aborted at any time by pressing the STOP OPEN key.

SELECT

- Press and hold the button for eight seconds.

```
>RCF<  RPM   t/min:s
* MACHINE MENU *
```

↓

SELECT

- Press the key until the following is displayed:

```
>RCF<  RPM   t/min:s
-> Time & Cycles
```

↓

START PULSE

- Press the key.
  TimeExt : External hours of operation.

Example:

```
>RCF<  RPM   t/min:s
TimeExt=     43 h
```

↓

RCF

- Press the key.
  The external hours of operation can now be set.

Example:

```
>RCF<  RPM   t/min:s
TimeExt=<    43>h
```

↓

t ▲ ▼

- Set the external hours of operation with the keys.

Example:

```
>RCF<  RPM   t/min:s
TimeExt=<     5>h
```

↓

START PULSE

- Press the key to save the setting.

```
>RCF<  RPM   t/min:s
Store TimeExt...
```

Example:

```
>RCF<  RPM   t/min:s
TimeExt=      5 h
```

↓

SELECT

- Press the key.
  TimeInt : Internal hours of operation.
  ☞ The internal hours of operation are not adjustable.

Example:

```
>RCF<  RPM   t/min:s
TimeInt=     60 h
```

↓

SELECT

- Press the key.
  Starts : Number of all centrifugation runs.
  ☞ This value is not adjustable.

Example:

```
>RCF<  RPM   t/min:s
Starts=     325
```

↓

STOP OPEN

- Press the key twice to exit the "-> Time & Cycles" menu or press three times to exit the "* MACHINE MENU *".

```
>RCF<  RPM   t/min:s
* MACHINE MENU *
```

Example:

```
>RCF<  RPM   t/min:s
6   4500      5:00
```

7.2.7 Switching the cycle counter on or off and setting the maximum permissible number of run cycles

> After exchanging the electronics, the cycle counter is switched off.
>
> For centrifuges with rotors whose period of use is limited to a certain number of run cycles (centrifugation runs), the cycle counter must be activated and the maximum permissible number of run cycles (centrifugation runs) of the rotor must be set.
>
> The rotors in question are labeled with the maximum permissible number of run cycles.

> For centrifuges with rotors whose period of use is not limited, the cycle counter is not required and should therefore be deactivated.

With the rotor at a standstill, the settings can be made as follows:

> The procedure can be aborted at any time by pressing the STOP OPEN key. In this case, the settings are not stored.

SELECT

- Press and hold the button for eight seconds.

↓

SELECT

- Press the key until the following is displayed:

↓

START PULSE

- Press the key.

Example:

↓

SELECT

- Press the key until one of the following is displayed:
  Cycles : Run cycles.
  off : Cycle counter switched off.
  on : Cycle counter switched on.

↓

START PULSE

- Press the key.
  Maximum permissible number of run cycles (centrifugation runs) of the rotor.

Example:

↓

RCF

- Press the key.

Example:

↓

t ▲ ▼

- Set with the keys.
  Switch off the cycle counter:
  Set zero.

  Switch on cycle counter:
  Set the maximum permissible number of run cycles (centrifugation runs) of the rotor (50000).

Example:

↓

Continued on next page

START PULSE

- Press the key to save the setting.

>RCF< RPM t/min:s
Store cycles ...

>RCF< RPM t/min:s
Store cycles ...

Example:

>RCF< RPM t/min:s
Cyc lim= 0

>RCF< RPM t/min:s
Cyc lim= 50000

↓

STOP OPEN

- Press the key.
  off : Cycle counter switched off.
  on : Cycle counter switched on.

>RCF< RPM t/min:s
Cycles= off

>RCF< RPM t/min:s
Cycles= on

↓

STOP OPEN

- Press the key twice to exit the "–> Time & Cycles" menu or press three times to exit the "* MACHINE MENU *".

>RCF< RPM t/min:s
* MACHINE MENU *

Example:

>RCF< RPM t/min:s
4500 5:00

7.2.8 Resetting the cycle counter to zero

After the rotor has been exchanged, the cycle counter must be reset to zero again.

> ⚠ The cycle counter may only be reset to zero if the rotor has been exchanged for a new rotor first.

With the rotor at a standstill, the cycle counter can be reset as follows:

> ☞ The procedure can be aborted at any time by pressing the STOP/OPEN key. In this case, the settings are not stored.

SELECT
- Press and hold the button for eight seconds.

>RCF< RPM t/min:s
* MACHINE MENU *

↓

SELECT
- Press the key until the following is displayed.

>RCF< RPM t/min:s
-> Time & Cycles

↓

START/PULSE
- Press the key.

Example:

>RCF< RPM t/min:s
TimeExt= 43 h

↓

SELECT
- Press the key until the following is displayed:
  Cyc sum : Number of completed run cycles.

>RCF< RPM t/min:s
Cyc sum= 50001

↓

RCF
- Press the key.

>RCF< RPM t/min:s
Cyc sum=< 50001>

↓

t ▼
- Press the key.
  The number of completed run cycles is reset to zero.

>RCF< RPM t/min:s
Cyc sum=< 0>

↓

START/PULSE
- Press the button to save the setting.

>RCF< RPM t/min:s
Store cycles ...

>RCF< RPM t/min:s
Cyc sum= 0

↓

STOP/OPEN
- Press the key twice to exit the "-> Time & Cycles" menu or press three times to exit the "* MACHINE MENU *".

>RCF< RPM t/min:s
* MACHINE MENU *

Example:

>RCF< RPM t/min:s
4500 5:00

7.3 SERVICE MENU

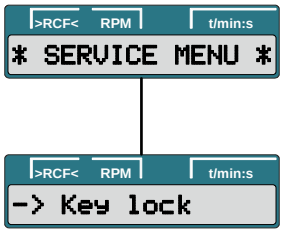

Setting:

- Key lock
  (chapter 7.3.1)

7.3.1 Key lock

To prevent a change in the centrifugation parameters by unauthorized persons, the following keys can be locked:

If the keys are locked, it is also no longer possible to carry out short-term centrifugation or an Emergency Stop.

> If the keys are locked, this is indicated on the display by the letter "L".
> Example:
>
> 
>
>
> If a key is pressed which is locked, the following is displayed:
>
> 
>

With the rotor at a standstill, the keys can be locked as follows:

> The procedure can be aborted at any time by pressing the STOP OPEN key. In this case, the settings are not stored.

- Press and hold the key for 16 seconds.

↓

- Press the key until the following is displayed:

↓

- Press the key.
  Unlocked : Keys not locked.
  Locked : Keys locked.

↓

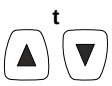

- Set **Locked** or **Unlocked** with the keys.

↓

Continued on next page

START PULSE

- Press the key to save the setting.

>RCF< RPM t/min:s
Store settings...

>RCF< RPM t/min:s
< Locked >

>RCF< RPM t/min:s
< Unlocked >

↓

STOP OPEN

- Press the key twice to exit the "–> Key lock" menu or three times to exit the "✱ SERVICE MENU ✱".

>RCF< RPM t/min:s
✱ SERVICE MENU ✱

Example:

>RCF< RPM t/min:s
▪ 4000 L 4:30

7.4 SELECT MENU

>RCF< RPM t/min:s
✱ SELECT MENU ✱

>RCF< RPM t/min:s
–> Version

Setting:

- Centrifuge model and type (chapter 7.4.1)

>RCF< RPM t/min:s
–> Imbalance

Setting:

- Imbalance switch-off (chapter 7.4.2)

>RCF< RPM t/min:s
–> Setup

Setting:

- Hiding the display of the centrifuge model (chapter 7.4.3)

>RCF< RPM t/min:s
✱ SELECT MENU ✱

>RCF< RPM t/min:s
–> Test

Setting:

- Centrifuge function test (chapter 7.4.4)

>RCF< RPM t/min:s
–> EEPROM

Setting:

- Displaying the contents of the memory cells of the EEPROM (chapter 7.4.5)
- Delete the centrifugation parameters in the EEPROM (chapter 7.4.6)
- Initializing the EEPROM (chapter 7.4.7)

>RCF< RPM t/min:s
–> Cont run

Setting:

- Automatic repetition of the centrifugation run (chapter 7.4.8)

7.4.1 Setting the centrifuge model and type

The model and type number of the centrifuge must be set in the program.
The model and type number of the centrifuge are displayed briefly after the device is switched on.

With the rotor at a standstill, the model and type number of the centrifuge can be set as follows:

> The procedure can be aborted at any time by pressing the STOP OPEN key. In this case, the settings are not stored.

START PULSE + STOP OPEN + ⏻

- Keep both keys pressed and switch on the mains switch at the same time.

>RCF< RPM t/min:s
* SELECT MENU *

↓

SELECT

- Press the key.

>RCF< RPM t/min:s
-> Version

↓

START PULSE

- Press the key.
  Centrifuge model.

Example:
>RCF< RPM t/min:s
EBA 200

↓

t ▲ ▼

- Set the centrifuge model with the keys.

Example:
>RCF< RPM t/min:s
EBA 200

↓

START PULSE

- Press the key.
  Centrifuge type

Example:
>RCF< RPM t/min:s
Item # 1800

↓

t ▲ ▼

- Set the centrifuge type with the keys.

Example:
>RCF< RPM t/min:s
Item # 1800

↓

START PULSE

- Press the key to save the setting.

>RCF< RPM t/min:s
Store version...

>RCF< RPM t/min:s
-> Version

↓

STOP OPEN

- Press the key once to exit the "-> Version" menu or twice to exit the "* SELECT MENU *".

>RCF< RPM t/min:s
* SELECT MENU *

Example:
>RCF< RPM t/min:s
4500 5:00

7.4.2 Setting the imbalance switch-off

A change in the imbalance switch-off affects all rotors.

The imbalance switch-off is defined by the weight difference of opposite-lying rotor places.

The imbalance switch-off is set and checked with the rotor unloaded and the required setting or switch-off weight in one rotor place.

When using angle rotors, a centrifuging container is used as the setting and switch-off weight.

To adjust the imbalance switch-off, the centrifuging container must have a total weight in the amount of the setting weight (total weight = container + contents).

For the test run to check the imbalance switch-off, the centrifuging container must have a total weight in the amount of the switch-off weight.

When using a hematocrit rotor, the required setting or switch-off weight must be placed in the padded shell of a rotor place.

The setting and switch-off weights of the various models are shown in the following table.

If there is a weight difference in the amount of the switch-off weight, the motor must shut down during startup.

Weights for setting and checking the imbalance switch-off		
Model	**Setting weight in grams**	**Switch-off weight in grams**
EBA 200, EBA 200 S	7	8
EBA 200 C	5	6
HAEMATOKRIT 200	3	4
MIKRO 185	3	5

The imbalance switch-off can be set as follows:

The procedure can be aborted at any time by pressing the STOP OPEN key. In this case, the settings are not stored.

START PULSE + STOP OPEN + ⏻

- Keep both keys pressed and switch on the mains switch at the same time.

>RCF< RPM t/min:s
* SELECT MENU *

↓

SELECT

- Press the key until the following is displayed:

>RCF< RPM t/min:s
-> Imbalance

↓

START PULSE

- Press the key.

When the lid is open:

>RCF< RPM t/min:s
START = Teaching

When the lid is closed:

>RCF< RPM t/min:s
! Open the lid !

↓

Continued on next page

STOP OPEN

- Only press the key if the following message is displayed:

>RCF< RPM t/min:s
! Open the lid !

>RCF< RPM t/min:s
START = Teaching

☞ If only one test run of the imbalance switch-off is to be carried out, the imbalance setting can be skipped.

SELECT

- Press the key. Afterwards, continue with the section "**Carrying out a test run**"; see page 38.

>RCF< RPM t/min:s
START = Test run

>RCF< RPM t/min:s
STOP = Exit

☞ The imbalance switch-off values can be queried.

t ▲ ▼

- The following values can be queried with the keys:

  Imbal limit : Imbalance limit value.
  BaseVal : Determined average value.
  PWM offset : Determined offset value.
  Threshold : Imbalance threshold value.

Example:

>RCF< RPM t/min:s
ImbalLimit= 3240

>RCF< RPM t/min:s
BaseVal = 4071

>RCF< RPM t/min:s
PWM offset= 6356

>RCF< RPM t/min:s
Threshold= 1400

☞ The imbalance threshold value (Threshold) is adjustable.
It must be set to 1400.

RCF

- Press the key.

>RCF< RPM t/min:s
Threshold=>1400<

↓

t ▲ ▼

- Set the value 1400 with the keys.

>RCF< RPM t/min:s
Threshold=>1400<

↓

START PULSE

- Press the key to save the setting.

>RCF< RPM t/min:s
Store values...

>RCF< RPM t/min:s
Threshold= 1400

↓

Continued on next page

Setting the imbalance

↓

☞ If the imbalance setting is aborted by pressing the STOP/OPEN key, the following message appears.

Press any key to clear the message.

>RCF< RPM t/min:s
!PROCESS FAILED!

>RCF< RPM t/min:s
!Test cancelled!

↓

START/PULSE

- Press the key.
  The values of the imbalance system are measured.

>RCF< RPM t/min:s
Imbal teaching

>RCF< RPM t/min:s
!!Do not shake!!

>RCF< RPM t/min:s
Ceck BaseVal...

If the system does not have to carry out an offset alignment:

>RCF< RPM t/min:s
BaseVal = 4071

>RCF< RPM t/min:s
Insert XX gram !

>RCF< RPM t/min:s
!Close the lid !

If the system does have to carry out an offset alignment:

>RCF< RPM t/min:s
PWM auto adjust

Example:

>RCF< RPM t/min:s
PWM offset= 6356

☞ If values lie outside of the allowed range, one of the following error messages appears.

BaseVal too low : Average value too low.
BaseVal too high: Average value too high.
PWMadjust failed : Offset alignment failed.

Press any key to clear the error message.

Possible cause:
- Magnet holder not correctly fastened to the motor.
- Magnet missing or is defective.
- The rubber/metal bearings are worn.

>RCF< RPM t/min:s
!PROCESS FAILED!

>RCF< RPM t/min:s
BaseVal too low

>RCF< RPM t/min:s
BaseVal too high

>RCF< RPM t/min:s
!PROCESS FAILED!

>RCF< RPM t/min:s
PWMadjust failed

↓

Continued on next page

START PULSE

- Only press the key if a PWM offset value is displayed.
  Example:

>RCF< RPM t/min:s
PWM offset= 6356

>RCF< RPM t/min:s
BaseVal = 4071

>RCF< RPM t/min:s
Insert XX gram !

>RCF< RPM t/min:s
!Close the lid !

↓

- Load a rotor place with the setting weight (for the setting weight, see the table on page 34).
  ☞ For angle rotors, use a centrifuging container. In the case of hematocrit rotors, place the setting weight in the padded shell of the rotor place.

>RCF< RPM t/min:s
Insert XX gram !

>RCF< RPM t/min:s
!Close the lid !

↓

- Close the lid.

>RCF< RPM t/min:s
! Press START !!

↓

START PULSE

- Press the key.
  ☞ Two short centrifugation runs are carried out to set the imbalance switch-off.
  Afterwards, a test run can be carried out to check the imbalance switch-off.

>RCF< RPM t/min:s
Teach run 1 ....

>RCF< RPM t/min:s
Teach run 2 ....

>RCF< RPM t/min:s
Imbal teach OK !

>RCF< RPM t/min:s
START = Test run

>RCF< RPM t/min:s
STOP = Exit

↓

Ending the imbalance adjustment

↓

STOP OPEN

- Only press the key if no test run is to be carried out.
  The imbalance adjustment will be ended.

>RCF< RPM t/min:s
-> Imbalance

↓

Continued on next page

Carrying out a test run

↓

START PULSE

- Press the key.

>RCF< RPM t/min:s
Imbal testing

>RCF< RPM t/min:s
! Open the lid !

↓

STOP OPEN

- Press the key.

>RCF< RPM t/min:s
Insert YY gram !

>RCF< RPM t/min:s
!Close the lid !

↓

- Load a rotor place with the switch-off weight (for the switch-off weight, see the table on page 34).
  ☞ For angle rotors, use a centrifuging container. In the case of hematocrit rotors, place the switch-off weight in the padded shell of the rotor place.

>RCF< RPM t/min:s
Insert YY gram !

>RCF< RPM t/min:s
!Close the lid !

↓

- Close the lid.

>RCF< RPM t/min:s
! Press START !!

↓

START PULSE

- Press the key.
  ☞ A short centrifugation run is carried out to check the imbalance switch-off.

>RCF< RPM t/min:s
Check Imbal ....

>RCF< RPM t/min:s
Imbal test OK !

>RCF< RPM t/min:s
! Open the lid !

☞ If no imbalance is detected during the test run, the following error message will appear.

Press any key to clear the error message.

Possible cause:
- The imbalance switch-off is incorrectly set.
- The switch-off weight used for the test run is not heavy enough.

>RCF< RPM t/min:s
!PROCESS FAILED!

>RCF< RPM t/min:s
NoImbal detected

↓

- Open the lid.

>RCF< RPM t/min:s
-> Imbalance

↓

STOP OPEN

- Press the key once to exit the "-> Imbalance" menu or twice to exit the "* SELECT MENU *".

>RCF< RPM t/min:s
* SELECT MENU *

Example:

>RCF< RPM t/min:s
4 4500 5:00

7.4.3 Hiding the display of the centrifuge model

The centrifuge model displayed after switching on the device can be hidden.

With the rotor at a standstill, the display of the centrifuge model can be hidden as follows:

> ☞ The procedure can be aborted at any time by pressing the STOP OPEN key. In this case, the settings are not stored.

START PULSE + STOP OPEN + ⏻

- Keep both keys pressed and switch on the mains switch at the same time.

>RCF< RPM t/min:s
* SELECT MENU *

↓

SELECT

- Press the key until the following is displayed:

>RCF< RPM t/min:s
-> Setup

↓

START PULSE

- Press the key.
  OEM version : Hide the display of the centrifuge model.
  off : Centrifuge model is displayed.
  on : Centrifuge model is not displayed.

>RCF< RPM t/min:s
OEM version= off

>RCF< RPM t/min:s
OEM version= on

↓

t ▲ ▼

- Set **off** or **on** with the keys.

>RCF< RPM t/min:s
OEM version= on

>RCF< RPM t/min:s
OEM version= off

↓

START PULSE

- Press the key to save the setting.

>RCF< RPM t/min:s
Store setup...

>RCF< RPM t/min:s
-> Setup

↓

STOP OPEN

- Press the key once to exit the "-> Setup" menu or twice to exit the "* SELECT MENU *".

>RCF< RPM t/min:s
* SELECT MENU *

Example:

>RCF< RPM t/min:s
4500 5:00

7.4.4 Function test

The individual centrifuge components can be tested for proper function.

With the rotor at a standstill, the function test can be carried out as follows:

> In order to be able to check the function of the speed sensor, the lid must be opened before beginning the function test.
>
> The procedure can be aborted at any time by pressing the STOP OPEN key. In this case, the settings are not stored.

START PULSE + STOP OPEN + ⏻

- Keep both keys pressed and switch on the mains switch at the same time.

```
>RCF<  RPM   t/min:s
* SELECT MENU *
```

↓

SELECT

- Press the key until the following is displayed:

```
>RCF<  RPM   t/min:s
-> Test
```

↓

START PULSE

- Press the key.
  Function test of the LCD display.

```
>RCF<  RPM   t/min:s
Display test
```

↓

t ▲ ▼

- Press one of the two keys.
  Alternately after each additional press of the key, either all segments of the display will light up or all segments of the display will be deactivated (no display).

```
>RCF<  RPM   t/min:s
```

```
>RCF<  RPM   t/min:s
```

↓

SELECT

- Press the key.
  Query the imbalance values.
  Imbal act : Current imbalance value.

Example:

```
>RCF<  RPM   t/min:s
Imbal act    4078
```

↓

t ▲ ▼

- Press one of the two keys.
  After every additional press of the key, the following displays appear one after the other:
  Imbal max : Maximum imbalance value of the last centrifugation run.
  Imbal lim : Imbalance limit value
  Imbal thld : Imbalance threshold value.

Example:

```
>RCF<  RPM   t/min:s
Imbal max     993
```

```
>RCF<  RPM   t/min:s
Imbal lim    2336
```

```
>RCF<  RPM   t/min:s
Imbal thld   1400
```

↓

SELECT

- Press the key.
  Function test of the speed sensor
  Motor RPM : Speed value of the speed sensor.

```
>RCF<  RPM   t/min:s
Motor RPM       0
```

↓

Continued on next page

- Rotate the rotor by hand.
  The speed value must be displayed.

Example:

↓

SELECT

- Press the key.
  Function test of the keys.

☞ Each key must be pressed one time.
The function test of the keys can also be skipped.

STOP OPEN

- Press the key twice.
  Afterwards, continue with the function test of the acoustic signal transducer.

↓

RCF

- Press the key.

↓

START PULSE

- Press the key.

↓

RPM/RCF ▲ ▼

- Press the keys one after the other.

↓

t ▲ ▼

- Press the keys one after the other.

↓

SELECT

- Press the key.

↓

STOP OPEN

- Press the key.

☞ The last-pressed key is not displayed.

↓

Continued on next page

Function test of the acoustic signal transducer.
Beep : Acoustic signal transducer.
off : Acoustic signal transducer is switched off.
on : Acoustic signal transducer is switched on.

>RCF< RPM t/min:s
Beep off

↓

t ▲ ▼

- Set **off** or **on** with the keys.

>RCF< RPM t/min:s
Beep on

>RCF< RPM t/min:s
Beep off

↓

SELECT

- Press the key.
  Function test of the lid lock.

>RCF< RPM t/min:s
Lid lock test

↓

t ▲

- Press the key.
  Position of the lid lock.

If the lid is unlocked:

>RCF< RPM t/min:s
Lid is open

If the lid is locked:

>RCF< RPM t/min:s
Lid is closed

↓

t ▲ ▼

- Press one of the two keys.
  If the lid is locked, it will be unlocked.

>RCF< RPM t/min:s
!Close the lid !

>RCF< RPM t/min:s
Opening Lid...

>RCF< RPM t/min:s
Lid is open

↓

- Close the lid.

>RCF< RPM t/min:s
Lid is closed

>RCF< RPM t/min:s
Lid is closed

☞ Unlocking the lid:

t ▲ ▼

- Press one of the two keys.

>RCF< RPM t/min:s
Opening Lid...

>RCF< RPM t/min:s
Opening Lid...

>RCF< RPM t/min:s
Lid is open

>RCF< RPM t/min:s
Lid is open

↓

SELECT

- Press the key.
  Status of the frequency converter.

>RCF< RPM t/min:s
FC state = 3858

↓

SELECT

- Press the key.
  Temperature in the frequency converter.

>RCF< RPM t/min:s
FC temp = 30°C

↓

SELECT

- Press the key.
  Value of the intermediate circuit voltage.

>RCF< RPM t/min:s
FC volt = 326 V

↓

Continued on next page

SELECT

- Press the key.
  Machine version.

Example:

```
>RCF< RPM t/min:s
Version  = 00-10
```

↓

STOP OPEN

- Press the key twice to exit the menu "–> Test" or press it three times to exit the "✱ SELECT MENU ✱".

```
>RCF< RPM t/min:s
✱ SELECT MENU ✱
```

Example:

```
>RCF< RPM t/min:s
6  4500     5:00
```

7.4.5 Displaying the contents of the memory cells of the EEPROM

The contents of the EEPROM memory cells can be displayed.

With the rotor at a standstill, the contents of the EEPROM memory cells can be displayed as follows:

> ☞ The procedure can be aborted at any time by pressing the STOP OPEN key. In this case, the settings are not stored.

START PULSE + STOP OPEN + ⏻

- Keep both keys pressed and switch on the mains switch at the same time.

```
>RCF< RPM t/min:s
✱ SELECT MENU ✱
```

↓

SELECT

- Press the key until the following is displayed:

```
>RCF< RPM t/min:s
-> EEPROM
```

↓

START PULSE

- Press the key.

```
>RCF< RPM t/min:s
EEPROM read
```

↓

START PULSE

- Press the key.
  The contents of the memory cells having addresses 00 to 03 are displayed.
  Example:**Adr0000 = C350C350**
  Addr. 00 = **C3**50C350
  Addr. 01 = C3**50**C350
  Addr. 02 = C350**C3**50
  Addr. 03 = C350C3**50**

Example:

```
>RCF< RPM t/min:s
Adr0000=C350C350
```

↓

t ▲

- Press the key.
  The contents of the memory cells having addresses 04 to 07 are displayed.
  Example:**Adr0004 = 03E803E8**

Example:

```
>RCF< RPM t/min:s
Adr0004=03E803E8
```

↓

t ▲ ▼

- The contents of the memory cells having addresses 00 to FF can be displayed with the keys.

Example:

```
>RCF< RPM t/min:s
Adr001C=18EF18EF
```

↓

STOP OPEN

- Press the key three times to exit the "–> EEPROM" menu or four times to exit the "✱ SELECT MENU ✱".

```
>RCF< RPM t/min:s
✱ SELECT MENU ✱
```

Example:

```
>RCF< RPM t/min:s
6  4500     5:00
```

7.4.6 Deleting the centrifugation parameters in the EEPROM

The centrifugation parameters in the EEPROM are reset to their default values.

Centrifugation parameters		Default value
Runtime	t/min, t/sec	1:00
Speed	RPM	1000
Relative centrifugal force	>RCF<	56
Centrifuging radius	RAD/mm	50
Brake stage	¯_DEC	fast

With the rotor at a standstill, the centrifugation parameters can be deleted as follows:

> ☞ The procedure can be aborted at any time by pressing the STOP/OPEN key. In this case, the settings are not stored.

START/PULSE + STOP/OPEN + ⏻

- Keep both keys pressed and switch on the mains switch at the same time.

>RCF< RPM t/min:s
* SELECT MENU *

↓

SELECT

- Press the key until the following is displayed:

>RCF< RPM t/min:s
-> EEPROM

↓

START/PULSE

- Press the key.

>RCF< RPM t/min:s
EEPROM read

↓

SELECT

- Press the key.

>RCF< RPM t/min:s
EE erase prog

↓

START/PULSE

- Press the key.

>RCF< RPM t/min:s
Erase prog no

↓

t ▲ ▼

- Set **yes** with the keys.
  yes : Delete centrifugation data
  no : Do not delete centrifugation data

>RCF< RPM t/min:s
Erase prog yes

↓

START/PULSE

- Press the key.
  Repeat confirmation

>RCF< RPM t/min:s
Are you sure?no

↓

t ▲ ▼

- Set **yes** with the keys.
  yes : Delete centrifugation data
  no : Do not delete centrifugation data

>RCF< RPM t/min:s
Are you sure?yes

↓

Continued on next page

START PULSE

- Press the key.
  The centrifugation data in the EEPROM are reset to their default values.

>RCF< RPM t/min:s
Erasing prog ...

>RCF< RPM t/min:s
EE erase prog

↓

STOP OPEN

- Press the key twice to exit the "–> EEPROM" menu or three times to exit the "✱ SELECT MENU ✱".

>RCF< RPM t/min:s
✱ SELECT MENU ✱

Example:

>RCF< RPM t/min:s
4500 5:00

7.4.7 Initializing the EEPROM

The following parameters/functions are reset to default values in the EEPROM.

Menu	Parameter / function		Default value
	Runtime	t/min, t/sec	1:00
	Speed	RPM	1000
	Relative centrifugal force	>RCF<	56
	Centrifuging radius	RAD/mm	50
	Brake stage	¯_DEC	fast
✱ MACHINE MENU ✱	Acoustic signal after ending the centrifugation run.	End beep	on
	Acoustic signal after a malfunction occurs.	Error beep	on
	Volume of the acoustic signal.	Beep volume	max
	Automatic unlocking of the lid after the centrifugation run	Lid AutoOpen	on
	Automatic shutdown of the backlighting	Power save	on
	Optical signal after ending the centrifugation run	End blinking	on
✱ SERVICE MENU ✱	Locking the keys	Key lock	Unlocked
✱ SELECT MENU ✱	Imbalance switch-off, limit value	Imbal limit	3500
	Imbalance switch-off, PWM offset value	PWM offset	6500
	Imbalance switch-off, threshold	Threshold	1400

After initializing the EEPROM, it is imperative that the following parameters/functions be set:
- Centrifuge model and type (see chapter 7.4.1)
- Imbalance switch-off (see chapter 7.4.2).

With the rotor at a standstill, the EEPROM can be initialized as follows:

The procedure can be aborted at any time by pressing the STOP OPEN key. In this case, the settings are not stored.

START PULSE + STOP OPEN +

- Keep both keys pressed and switch on the mains switch at the same time.

>RCF< RPM t/min:s
✱ SELECT MENU ✱

↓

SELECT

- Press the key until the following is displayed:

>RCF< RPM t/min:s
–> EEPROM

↓

Continued on next page

START PULSE

- Press the key.

>RCF< RPM t/min:s
EEPROM read

↓

SELECT

- Press the key until the following is displayed:

>RCF< RPM t/min:s
EE init data

↓

START PULSE

- Press the key.

>RCF< RPM t/min:s
Erase InitD. no

↓

t ▲ ▼

- Set **yes** with the keys.
  yes : Initialize EEPROM
  no : Do not initialize EEPROM

>RCF< RPM t/min:s
Erase InitD. yes

↓

START PULSE

- Press the key.
  Repeat confirmation

>RCF< RPM t/min:s
Are you sure?no

↓

t ▲ ▼

- Set **yes** with the keys.
  yes : Initialize EEPROM
  no : Do not initialize EEPROM

>RCF< RPM t/min:s
Are you sure?yes

↓

START PULSE

- Press the key.
  The EEPROM will be initialized.

>RCF< RPM t/min:s
Erasing data ...

>RCF< RPM t/min:s
EE init data

↓

STOP OPEN

- Press the key three times to exit the "–> EEPROM" menu.

  ☞ After initialization, it is not possible to exit the "✱ SELECT MENU ✱". First, in the "–> Version" menu, the model and type number of the centrifuge have to be set and then the imbalance switch-off set in the "–> Imbalance" menu.

>RCF< RPM t/min:s
✱ SELECT MENU ✱

>RCF< RPM t/min:s
–> Version

7.4.8 Automatic repetition of the centrifugation run

For testing purposes, the automatic repetition of the centrifugation run can be set.

The number of centrifugation runs is counted automatically.

The pause time between centrifugation runs is adjustable.

> The automatic repetition of the centrifugation run only remains active until the test run is finished or the centrifuge is switched off.
>
> The automatic repetition of the centrifugation run is indicated by the letter "C".
>
> Example:
>
> >RCF< RPM t/min:s
> 4500 C 4:35

Carry out the test run with automatic repetition of the centrifugation run as follows:

> The procedure can be aborted at any time by pressing the STOP/OPEN key. In this case, the settings are not stored.

START/PULSE + STOP/OPEN + ⏻

- Keep both keys pressed and switch on the mains switch at the same time.

>RCF< RPM t/min:s
* SELECT MENU *

↓

SELECT

- Press the key until the following is displayed:

>RCF< RPM t/min:s
-> Cont run

↓

START/PULSE

- Press the key.
  t/break : Pause between centrifugation runs.

>RCF< RPM t/min:s
t/break = 0:00

↓

t ▲ ▼

- Set the pause time with the keys.
  It is adjustable from 1 second to 2 minutes and 59 seconds in 1-second intervals.

Example:

>RCF< RPM t/min:s
t/break = 0:10

↓

START/PULSE

- Press the key to save the setting.

>RCF< RPM t/min:s
Store setting...

Number of completed centrifugation runs of the last test run.

Example:

>RCF< RPM t/min:s
Run # = 15

↓

STOP/OPEN

- Press the key three times to exit the "* SELECT MENU *".

Example:

>RCF< RPM t/min:s
4500 5:00

↓

Continued on next page

- Close the lid.

Example:

↓

START PULSE

- Press the key.
  The test run with automatic repetition of the centrifugation run will be carried out.

  With the rotor at a standstill, between centrifugation runs, the number of already completed centrifugation runs of the test run is briefly displayed.

  Then the remaining pause time will be displayed.

↓

Ending the test run

↓

STOP OPEN

- Press the key while the pause time is counting down.
  The lid will open automatically.

Example:

  After the pause time has elapsed, the centrifugation data will be displayed.

8 Functional check after a repair

After a repair a functional check of the unit must be carried out. For functional check a test run with the loaded rotor must be performed.

During the test run the followings must be checked:

- Function of the keys and the display.
- Run-up and slow-down time, max. speed of the rotor. Values see operating instructions chapter "Anhang/Appendix, Rotoren und Zubehör/Rotors and accessories".
- Sample temperature. Values see operating instructions chapter "Anhang/Appendix, Rotoren und Zubehör/Rotors and accessories".
- Imbalance switch-off. Values see chapter "7.4.2".
- Current consumption. Values see chapter "12.3".

After the test run a safety test must be carried out. Check the following values:

• Insulation resistance	> 2	MΩ
• Protective conductor resistance	< 0.2	Ω
• Leakage current	< 3.5	mA *
	* limit according to EN 61010-1	

A laboratory centrifuge do not belong to those medical appliances which may be tested according to the regulation IEC 60601-1 or corresponding national medical electronic standards. Laboratory centrifuges are classified as laboratory equipment.
The regulations applying to laboratory equipment are IEC 61010-1 or European standard EN 61010-1.

9 General arrangement of the components

Item	Designation
1	Lid, complete
1.1	Lid
1.2	Locking tab
1.3	Lid covering
1.4	Window with adhesive ring
2	Leg spring
3	Rubber foot
4	Upper housing part, complete with control panel
4.1	Upper housing part
4.2	Cover foil for control panel (A2)
4.3	Control panel (A2)
5	Sealing ring
6	Centrifuge chamber
7	Lid lock (A4)
8	Motor cover (for EBA 200, HAEMATOKRIT 200, MIKRO 185 only)
9	Motor (M1), complete
9.1	Dog (for EBA 200 S, HAEMATOKRIT 200, MIKRO 185 only)
10	Speed sensor (B1)
11	Holder with magnet
12	Rubber/metal bearing
13	Anti-twist device, bottom
14	Anti-twist device, top
15	Appliance plug (A3) without fuse holder (for EBA 200 only)
16	Fuse holder
17	Fuse
18	Electronics (A1), type LT 200VA (for EBA 200 only)
19	Electronics (A1), type LT 300VA FU (for EBA 200 S, HAEMATOKRIT 200, MIKRO 185 only)
20	Electronics (A3), type LT 300VA NE, without fuse holder (for EBA 200 S, HAEMATOKRIT 200, MIKRO 185 only)
21	Drip tray (for EBA 200 only)
22	Air duct (for MIKRO 185 only)

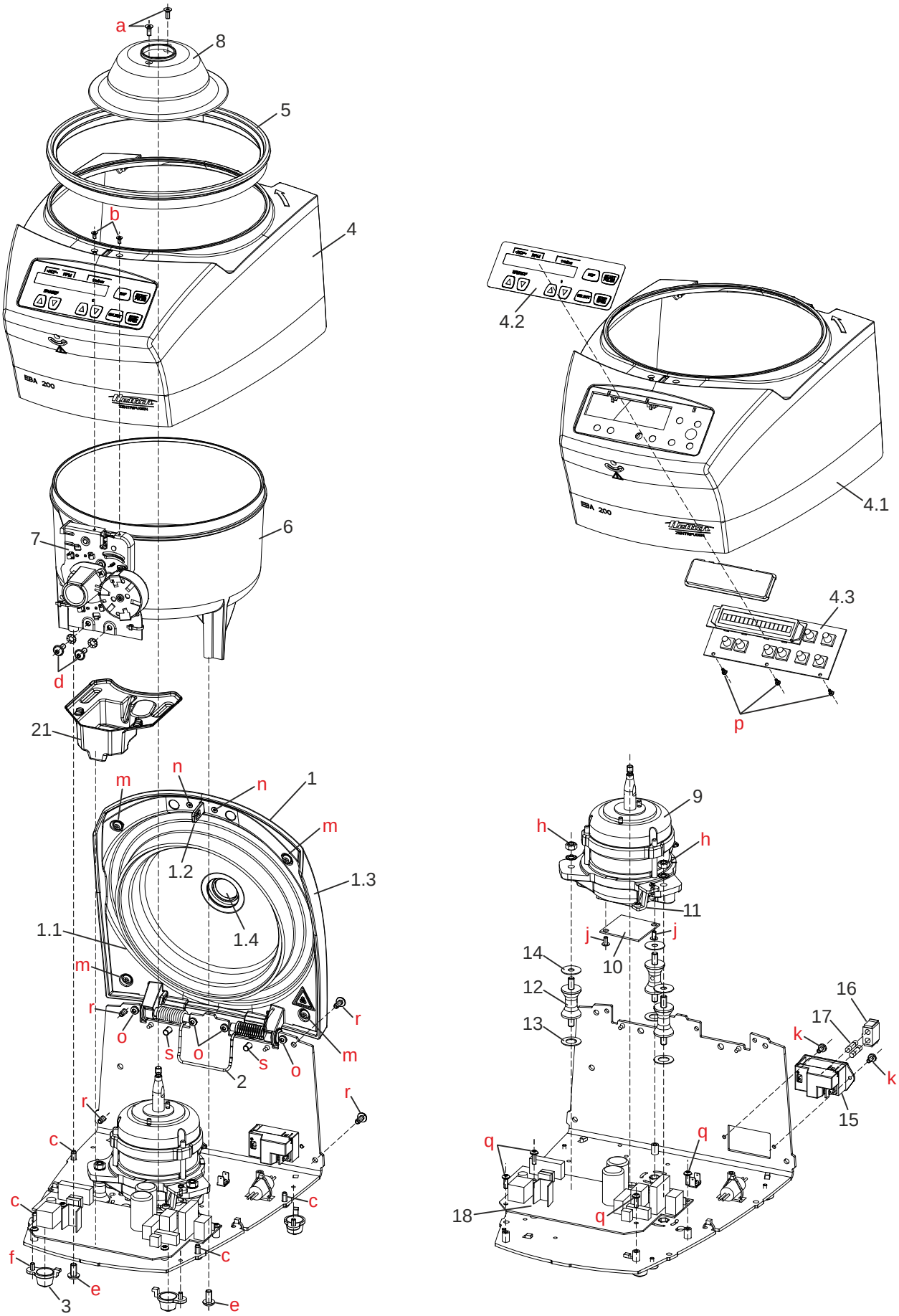
a
8
5
b
4
EBA 200
4.2
4.1
7
6
d
21
4.3
p
m
n
n
1
m
1.2
1.3
1.1
1.4
m
r
r
o
s
o
s
o
m
2
r
r
c
c
c
f
e
3
e
9
h
h
11
j
j
14
10
12
16
13
17
k
k
15
q
q
18
q

Fig. 1 EBA 200

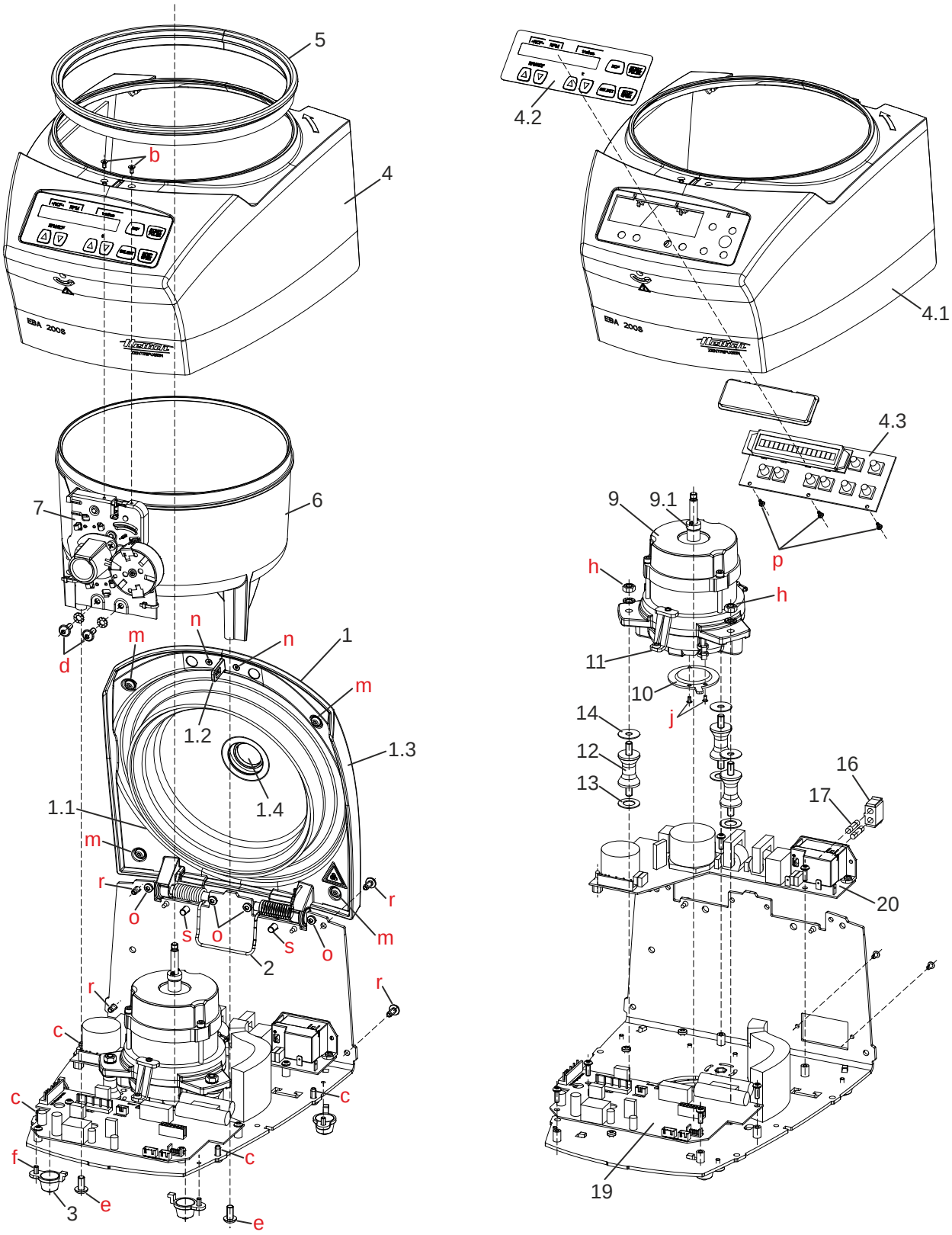

Fig. 2 **EBA 200 S**

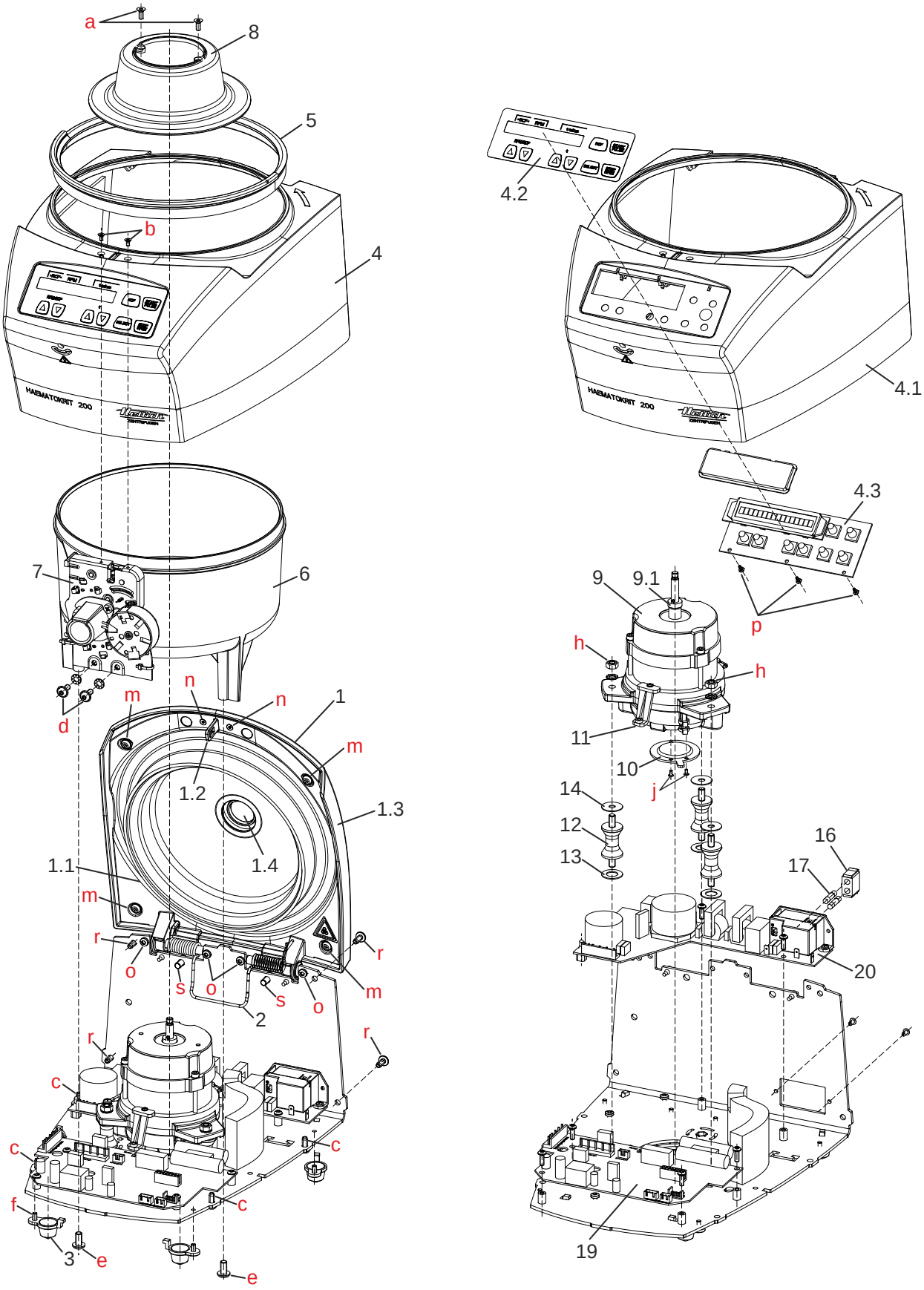

Fig. 3 HAEMATOKRIT 200

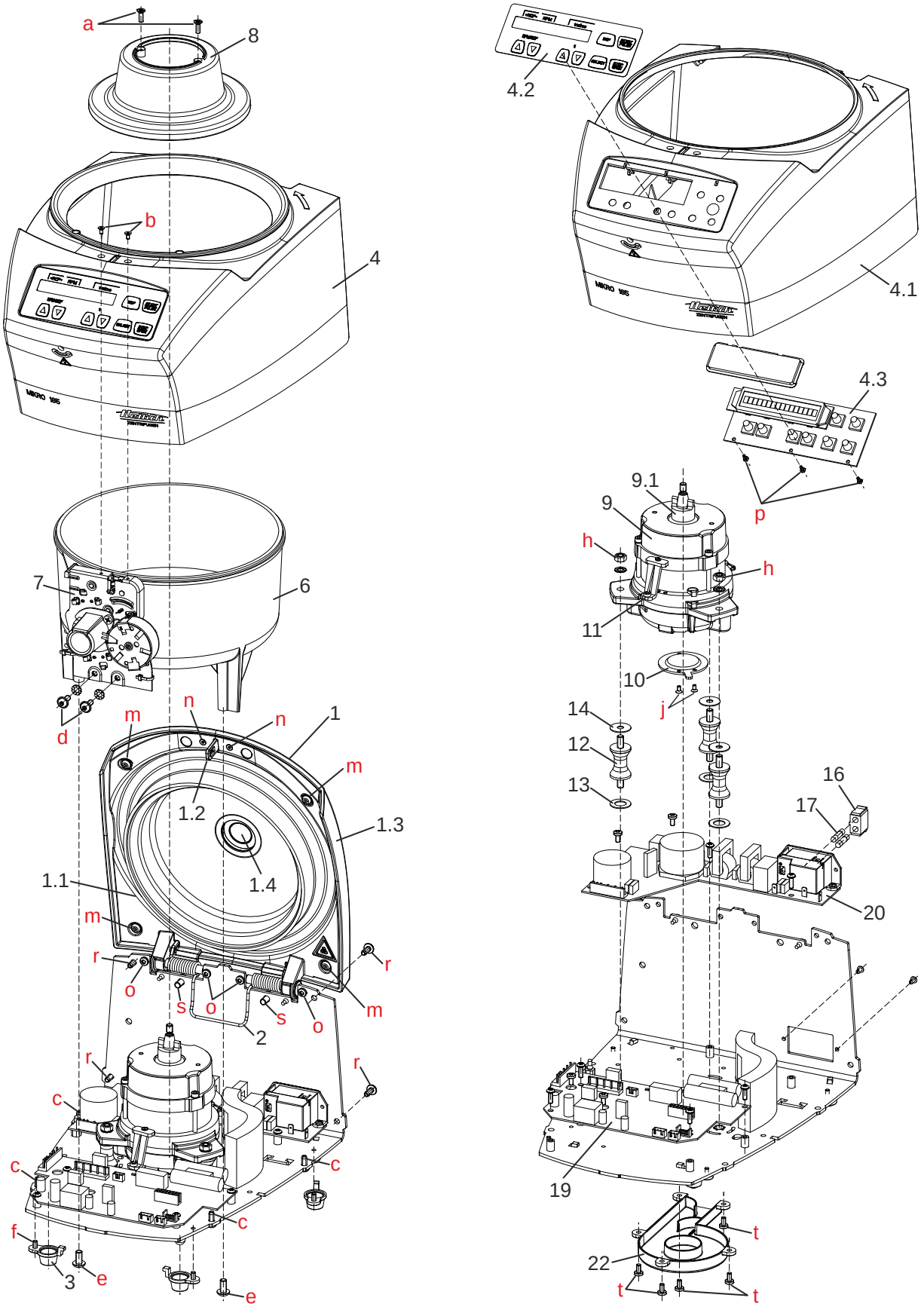

Fig. 4 **MIKRO 185**

10 Installing and removing components

> Before installing and removing components, the mains switch must be switched off and the centrifuge disconnected from the mains.

10.1 Removing the upper housing part

- Switch on the device.
- Press the STOP OPEN key to unlock the lid and then open the lid.
- Switch off the mains switch and disconnect the centrifuge from the mains.
- Screw the two fastening screws of the lid lock (pg. 51, Fig. 1, b | pg. 52, Fig. 2, b | pg. 53, Fig. 3, b | pg. 54, Fig. 4, b) out of the upper housing part.
- Screw the four fastening screws of the upper housing part (pg. 51, Fig. 1, c | pg. 52, Fig. 2, c | pg. 53, Fig. 3, c | pg. 54, Fig. 4, c) out of the base plate of the device.
- Screw the four fastening screws of the upper housing part (pg. 51, Fig. 1, r | pg. 52, Fig. 2, r | pg. 53, Fig. 3, r | pg. 54, Fig. 4, r) out of the rear side of the device.
- Lift up the upper housing part (pg. 51, Fig. 1, item 4 | pg. 52, Fig. 2, item 4 | pg. 53, Fig. 3, item 4 | pg. 54, Fig. 4, item 4) somewhat and tilt forward.
- Unplug the ribbon cable (plug S601 or S501) from the electronics (A1).
  ☞ Plug S601: EBA 200
  Plug S501: EBA 200 S, HAEMATOKRIT 200, MIKRO 185
- The upper housing part is installed in the opposite order.
  ☞ Make sure that all plugs are plugged in again and all cables are fastened where they should be. For the plug positions, see pg. 63, chapter 12.2.

  The screws may only be tightened with a maximum torque of 0.3 Nm.

10.2 Removing the centrifuging chamber

- Remove the upper housing part; see pg. 55, chapter 10.1.
- Remove the rotor.
- Screw the two screws (pg. 51, Fig. 1, a | pg. 52, Fig. 2, a | pg. 53, Fig. 3, a | pg. 54, Fig. 4, a) out of the motor cover and remove the motor cover.
  ☞ The EBA 200 S does not have a motor cover.
- Remove the motor cable fastening from the centrifuging chamber.
- Remove the cable fastening of the speed sensor (B1) from the lid lock cable (for EBA 200 S, HAEMATOKRIT 200, MIKRO 185 only).
- Unplug plug S104 from the electronics (A1). For the plug position, see pg. 63, chapter 12.2.
- Screw the two fastening screws of the centrifuging chamber (pg. 51, Fig. 1, e | pg. 52, Fig. 2, e | pg. 53, Fig. 3, e | pg. 54, Fig. 4, e) out of the base plate of the device.
- Screw the two fastening screws of the centrifuging chamber (pg. 51, Fig. 1, s | pg. 52, Fig. 2, s | pg. 53, Fig. 3, s | pg. 54, Fig. 4, s) out of the rear side of the device.
- Lift up the centrifuging chamber (pg. 51, Fig. 1, item 6 | pg. 52, Fig. 2, item 6 | pg. 53, Fig. 3, item 6 | pg. 54, Fig. 4, item 6) and remove.
- The centrifuging chamber is installed in the opposite order.
  ☞ Make sure that all plugs are plugged in again and all cables are fastened where they should be. For the plug positions, see pg. 63, chapter 12.2.

10.3 Drip tray
(for EBA 200 only)

- Screw the two fastening screws of the centrifuging chamber (pg. 51, Fig. 1, s) out of the rear side of the device.
- Unscrew the two fastening screws of the centrifuging chamber (pg. 51, Fig. 1, e) at the base plate of the device only about 4 mm.
- Lift the centrifuging chamber (pg. 51, Fig. 1, item 6) upwards and pull out the drip tray (pg. 51, Fig. 1, item 21) to the front.
  ☞ Be careful when pulling out the drip tray that no components on the electronics (A1) may be damaged.
- The drip tray is installed in the opposite order.
  ☞ Be careful when pushing in the drip tray that no components on the electronics (A1) may be damaged.

10.4 Motor (M1) / speed sensor (B1) / rubber/metal bearing

> ⚠ After disconnecting the centrifuge from the mains, wait for at least 2 minutes until the intermediate circuit capacitors of the frequency converter have discharged.

- Remove the centrifuging chamber; see pg. 55, chapter 10.2.
- Remove the cable fastening of the speed sensor (B1) from the base plate (for EBA 200 only).
- Unplug plugs S101 and S602 / S504 from the electronics (A1). For the plug positions, see pg. 63, chapter 12.2.
  ☞ Plug S602: EBA 200
  Plug S504: EBA 200 S, HAEMATOKRIT 200, MIKRO 185
- Loosen the three fastening nuts of the motor (pg. 51, Fig. 1, h | pg. 52, Fig. 2, h | pg. 53, Fig. 3, h | pg. 54, Fig. 4, h) and remove.
- Unplug the motor's grounding cable and remove the motor (pg. 51, Fig. 1, item 9 | pg. 52, Fig. 2, item 9 | pg. 53, Fig. 3, item 9 | pg. 54, Fig. 4, item 9) from the centrifuge.
- Screw the speed sensor (pg. 51, Fig. 1, item 10 | pg. 52, Fig. 2, item 10 | pg. 53, Fig. 3, item 10 | pg. 54, Fig. 4, item 10) off from the bottom of the motor (two screws for the EBA 200 and three screws for EBA 200 S, HAEMATOKRIT 200, MIKRO 185, see pg. 51, Fig. 1, j | pg. 52, Fig. 2, j | pg. 53, Fig. 3, j | pg. 54, Fig. 4, j).
- Before installing the motor, check the three rubber/metal bearings (pg. 51, Fig. 1, item 12 | pg. 52, Fig. 2, item 12 | pg. 53, Fig. 3, item 12 | pg. 54, Fig. 4, item 12) for any wear or cracks and replace them, if necessary. If a rubber/metal bearing is damaged, all three rubber/metal bearings have to be replaced. To replace the rubber/metal bearings, screw them out of the base plate.
  When installing the rubber/metal bearings, make sure that there is an anti-twist device (pg. 51, Fig. 1, item 13, 14 | pg. 52, Fig. 2, item 13, 14 | pg. 53, Fig. 3, item 13, 14 | pg. 54, Fig. 4, item 13, 14) on both sides of the rubber/metal bearing in order to prevent it from twisting during installation.
  ☞ The anti-twist devices above and below the rubber/metal bearing are different.
- The rubber/metal bearing, the speed sensor and the motor are installed in the opposite order.
  ☞ Make sure that all plugs are plugged in again and all cables are fastened where they should be. For the plug positions, see pg. 63, chapter 12.2.
  - After installing the motor, the imbalance switch-off must be checked; see pg. 34, chapter 7.4.2.

10.5 Holder with magnet on the motor

- Remove the upper housing part; see pg. 55, chapter 10.1.
- Screw the holder (pg. 51, Fig. 1, item 11 | pg. 52, Fig. 2, item 11 | pg. 53, Fig. 3, item 11 | pg. 54, Fig. 4, item 11) off of the motor.
- The holder is installed in the opposite order.
  ☞ The holder must be placed in such a way that the magnet is located directly above the hall sensor.
- After installing the holder, the imbalance switch-off must be checked; see pg. 34, chapter 7.4.2.

10.6 Lid lock (A4)

- Remove the upper housing part; see pg. 55, chapter 10.1.
- Unplug plug S104 from the electronics (A1). For the plug position, see pg. 63, chapter 12.2.
- Remove the cable fastening of the speed sensor (B1) from the lid lock cable (for EBA 200 S, HAEMATOKRIT 200, MIKRO 185 only).
- Screw the two fastening screws of the lid lock (pg. 51, Fig. 1, d | pg. 52, Fig. 2, d | pg. 53, Fig. 3, d | pg. 54, Fig. 4, d) from the centrifuging chamber.
- Exchange the lid lock (pg. 51, Fig. 1, item 7 | pg. 52, Fig. 2, item 7 | pg. 53, Fig. 3, item 7 | pg. 54, Fig. 4, item 7).
- The lid lock is installed in the opposite order.
  ☞ Before tightening the two fastening screws of the lid lock (pg. 51, Fig. 1, d | pg. 52, Fig. 2, d | pg. 53, Fig. 3, d | pg. 54, Fig. 4, d) make sure that the locking tab on the lid (pg. 51, Fig. 1, item 1.2 | pg. 52, Fig. 2, item 1.2 | pg. 53, Fig. 3, item 1.2 | pg. 54, Fig. 4, item 1.2), moves centred into the lid lock when the lid is locked, and doesn't scrape on the housing of the lid lock.

  Make sure that all plugs are plugged in again and all cables are fastened where they should be. For the plug positions, see pg. 63, chapter 12.2.

10.7 Electronics (A1)

After disconnecting the centrifuge from the mains, wait for at least 2 minutes until the intermediate circuit capacitors of the frequency converter have discharged.

After replacement of the electronics, it is imperative that the imbalance switch-off (see chapter 7.4.2) be set.

Installation and removal for EBA 200:

- Remove the upper housing part; see pg. 55, chapter 10.1.
- Unplug all plugs from the electronics (pg. 51, Fig. 1, item 18).
- Screw out the four fastening screws from the electronics (pg. 51, Fig. 1, q).
- Exchange the electronics.
- The electronics is installed in the opposite order.
  ☞ Make sure that all plugs are plugged in again and all cables are fastened where they should be. For the plug positions, see pg. 63, chapter 12.2.
- After installing the electronics the imbalance switch-off (see chapter 7.4.2) must be set.

Installation and removal for EBA 200 S, HAEMATOKRIT 200, MIKRO 185:

- Remove the lid lock (A4); see pg. 56, chapter 10.6.
- Unplug all plugs from the electronics (pg. 52, Fig. 2, item 19 | pg. 53, Fig. 3, item 19 | pg. 54, Fig. 4, item 19).
- Screw the six fastening screws out of the electronics (Fig. 5, a, b).
  ☞ The two screws (Fig. 5, b) are located on the cooling plate of the electronics (A1).
- Exchange the electronics.
- The electronics is installed in the opposite order.
  ☞ Make sure that all plugs are plugged in again and all cables are fastened where they should be. For the plug positions, see pg. 63, chapter 12.2.

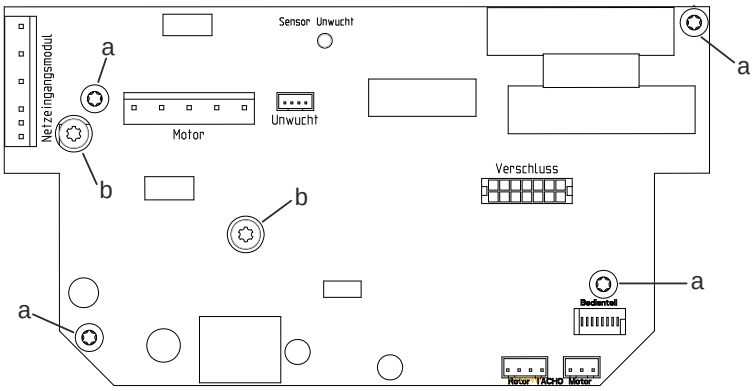

Fig. 5

10.8 Control panel (A2) / ribbon cable (W1)

After replacement of the control panel, it is imperative that the following parameters/functions be set:

- Centrifuge model and type (see chapter 7.4.1)
- Imbalance switch-off (see chapter 7.4.2).

- Remove the upper housing part; see pg. 55, chapter 10.1.
- Screw the three fastening screws out of the control panel (pg. 51, Fig. 1, p | pg. 52, Fig. 2, p | pg. 53, Fig. 3, p | pg. 54, Fig. 4, p).
- Lift up the control panel (pg. 51, Fig. 1, item 4.3 | pg. 52, Fig. 2, item 4.3 | pg. 53, Fig. 3, item 4.3 | pg. 54, Fig. 4, item 4.3) on the side of the fastening screws and pull out of the holder.
- If necessary, unplug the ribbon cable (W1) from the control panel (A2).
- The control panel is installed in the opposite order.
  ☞ Make sure that all plugs are plugged in again and all cables are fastened where they should be. For the plug positions, see pg. 63, chapter 12.2.
- After installing the control panel the centrifuge model and the type (see chapter 7.4.1) and the imbalance switch-off (see chapter 7.4.2) must be set.

10.9 Electronics (A3)
(for EBA 200 S, HAEMATOKRIT 200, MIKRO 185 only)

> After disconnecting the centrifuge from the mains, wait for at least 2 minutes until the intermediate circuit capacitors of the frequency converter have discharged.

- Remove the centrifuging chamber; see pg. 55, chapter 10.2.
- Unplug all plugs from the electronics (pg. 52, Fig. 2, item 20 | pg. 53, Fig. 3, item 20 | pg. 54, Fig. 4, item 20).
- Remove both body-bound rivets (Fig. 6, c) at the appliance plug.
  ☞ Press the pin of the body-bound rivet from inside out and remove it. Afterwards press the body-bound rivet also from inside out and remove it.
- Screw the four fastening screws out of the electronics (Fig. 6, b, c).
  ☞ The two screws (Fig. 6, c) are located on the cooling plate of the electronics (A3).
- Exchange the electronics.
- The electronics is installed in the opposite order.
  ☞ Make sure that all plugs are plugged in again and all cables are fastened where they should be. For the plug positions, see pg. 63, chapter 12.2.

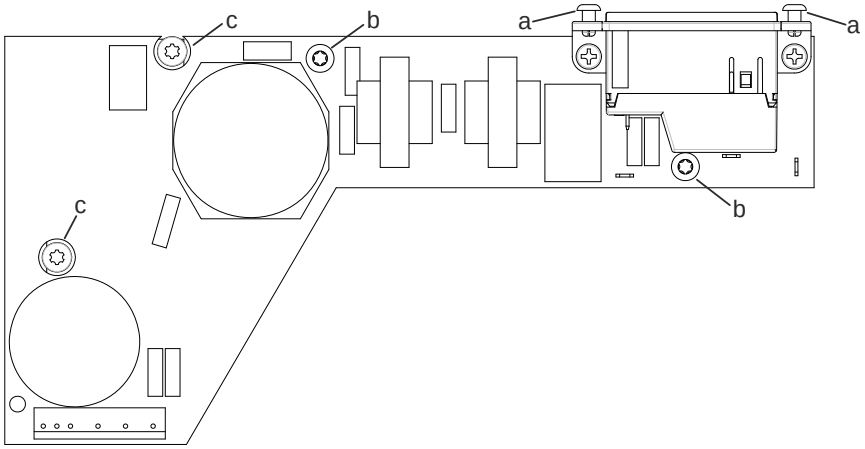

Fig. 6

10.10 Appliance plug (A3)
(for EBA 200 only)

- Remove the upper housing part; see pg. 55, chapter 10.1.
- Disconnect all cables from the appliance plug (pg. 51, Fig. 1, item 15).
- Remove the two fastening screws from the appliance plug (pg. 51, Fig. 1, k) and remove the appliance plug from the housing.
- Remove the fuse holder (pg. 51, Fig. 1, item 16) from the appliance plug.
- Exchange the appliance plug.
- The appliance plug is installed in the opposite order.
  ☞ Make sure that all plugs are plugged in again and all cables are fastened where they should be. For the plug positions, see pg. 63, chapter 12.2.

10.11 Sealing ring

(for EBA 200, EBA 200 S, HAEMATOKRIT 200 only)

- Switch on the device.
- Press the STOP/OPEN key to unlock the lid and then open the lid.
- Switch off the mains switch and disconnect the centrifuge from the mains.
- Screw the two fastening screws of the lid lock (pg. 51, Fig. 1, b | pg. 52, Fig. 2, b | pg. 53, Fig. 3, b) out of the upper housing part.
- Screw the four fastening screws of the upper housing part (pg. 51, Fig. 1, r | pg. 52, Fig. 2, r | pg. 53, Fig. 3, r) out of the rear side of the device.
- Loosen the four fastening screws of the upper housing part (pg. 51, Fig. 1, c | pg. 52, Fig. 2, c | pg. 53, Fig. 3, c) at the base plate of the device, but do not remove them.
- Remove the damaged sealing ring (pg. 51, Fig. 1, item 5 | pg. 52, Fig. 2, item 5 | pg. 53, Fig. 3, item 5) and remove any existing adhesive and rubber residues.
- Lift the upper housing part (pg. 51, Fig. 1, item 4 | pg. 52, Fig. 2, item 4 | pg. 53, Fig. 3, item 4) slightly and put the new sealing ring on the upper housing part. Pay attention to the correct position of the sealing ring.

  EBA 200 / 200 S:
  The bonded seam of the sealing ring (indicated by the two venting holes) must be at the rear of the upper housing part left of the middle. Exact position of the bonded seam is shown in Fig. 7, a. The two venting holes in the sealing ring must face outwards.

  HAEMATOKRIT 200:
  The part of the sealing ring with the higher profile must be located in the front of the upper housing part and the higher profile has to facing up. Exact position of the sealing ring is shown in Fig. 8, a.
- Tighten the four fastening screws of the upper housing (pg. 51, Fig. 1, c | pg. 52, Fig. 2, c | pg. 53, Fig. 3, c) part at the base plate of the device again.
  ☞ The screws may only be tightened with a maximum torque of 0.3 Nm.
- Screw in and tighten the four fastening screws of the upper housing part (pg. 51, Fig. 1, r | pg. 52, Fig. 2, r | pg. 53, Fig. 3, r) at the rear side of the device.
  ☞ The screws may only be tightened with a maximum torque of 0.3 Nm.
- Screw in the two fastening screws of the lid lock (pg. 51, Fig. 1, b | pg. 52, Fig. 2, b | pg. 53, Fig. 3, b) at the upper housing part and tighten them only slightly to avoid cracking on the upper housing part.
  ☞ The screws may only be tightened with a maximum torque of 0.3 Nm.
- Glue the sealing ring at five positions on the upper housing part. Gluing points shown in Fig. 7, b and Fig. 8, b.
- After gluing check the correct position of the sealing ring. The sealing ring must lie flat on the upper housing part and rest inside on the edge of the centrifuge chamber. The lid must not touch the sealing ring. Check this by opening and closing the lid.
- Remove too much applied adhesive with a cloth.
- After gluing leave the device with opened lid for one day for the adhesive to cure.

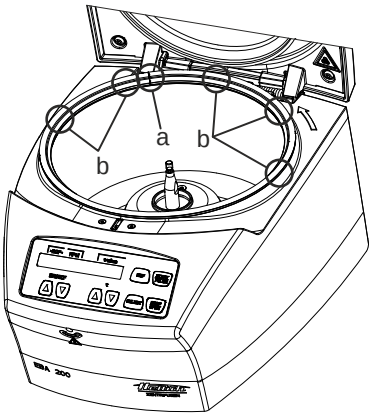

Fig. 7

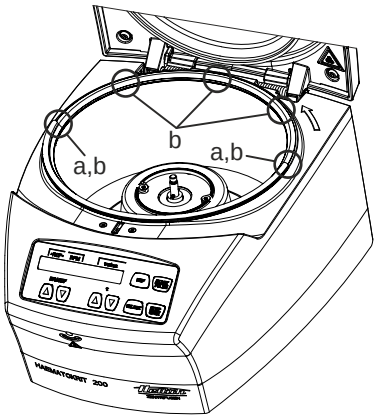

Fig. 8

10.12 Lid / leg spring

- Remove the centrifuging chamber; see pg. 55, chapter 10.2.
- Open the lid as far as it can go (the lid will stand vertically).
- Remove the two fastening screws from each of the hinge pins (pg. 51, Fig. 1, o | pg. 52, Fig. 2, o | pg. 53, Fig. 3, o | pg. 54, Fig. 4, o).
- Remove the lid (pg. 51, Fig. 1, item 1 | pg. 52, Fig. 2, item 1 | pg. 53, Fig. 3, item 1 | pg. 54, Fig. 4, item 1) upward.
- Pull out the two hinge pins and exchange the leg spring.
- The leg spring is installed in the opposite order.

  ☞ Make sure that all plugs are plugged in again and all cables are fastened where they should be. For the plug positions, see pg. 63, chapter 12.2.

10.13 Lid covering / locking tab

- Remove the upper housing part; see pg. 55, chapter 10.1.
- Screw the four fastening screws out of the lid covering (pg. 51, Fig. 1, m | pg. 52, Fig. 2, m | pg. 53, Fig. 3, m | pg. 54, Fig. 4, m).
- Remove the lid covering (pg. 51, Fig. 1, item 1.3 | pg. 52, Fig. 2, item 1.3 | pg. 53, Fig. 3, item 1.3 | pg. 54, Fig. 4, item 1.3).
- Screw the two fastening screws out of the locking tab (pg. 51, Fig. 1, n | pg. 52, Fig. 2, n | pg. 53, Fig. 3, n | pg. 54, Fig. 4, n).
- Exchange the locking tab (pg. 51, Fig. 1, item 1.2 | pg. 52, Fig. 2, item 1.2 | pg. 53, Fig. 3, item 1.2 | pg. 54, Fig. 4, item 1.2).
- The locking tab and the lid covering are installed in the opposite order.

  ☞ The locking tab on the lid must move centred into the lid lock when the lid is being locked and must not scrape on the housing of the lid lock.

10.14 Air duct
(for MIKRO 185 only)

- Screw the five fastening screws of the air duct (pg. 54, Fig. 4, t) out of the base plate.
- Exchange the air duct (pg. 54, Fig. 4, item 22).
- The air duct is installed in the opposite order.

11 Change mains input fuses

⚠ Switch off the mains switch and separate the device from the mains!

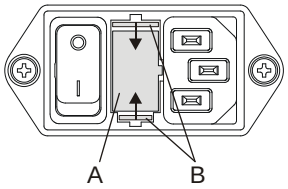

The fuse holder (A) with the mains input fuses is located next to the mains switch.

- Remove the connecting cable from the machine plug socket.
- Press the snap-fit (B) against the fuse holder (A) and remove.
- Exchange defective mains input fuses.

  ⚠ Only use fuses with the rating defined for the type. See the following table.

- Reinsert the fuse holder until the snap-fit clicks shut.
- Reconnect the device to the mains supply.

Model	Type	Fuse	Order no.
MIKRO 185	1203	T 3.15 AH/250V	E997
MIKRO 185	1203-01	T 6.3 AH/250V	2266
EBA 200	1800	T 1.6 AH/250V	E891
EBA 200	1800-01	T 3.15 AH/250V	E997
HAEMATOKRIT 200	1801	T 3.15 AH/250V	E997
HAEMATOKRIT 200	1801-01	T 6.3 AH/250V	2266
EBA 200 S	1802	T 3.15 AH/250V	E997
EBA 200 S	1802-01	T 6.3 AH/250V	2266

12 Technical documents

12.1 Block diagrams of the control

12.1.1 Block diagram EBA 200

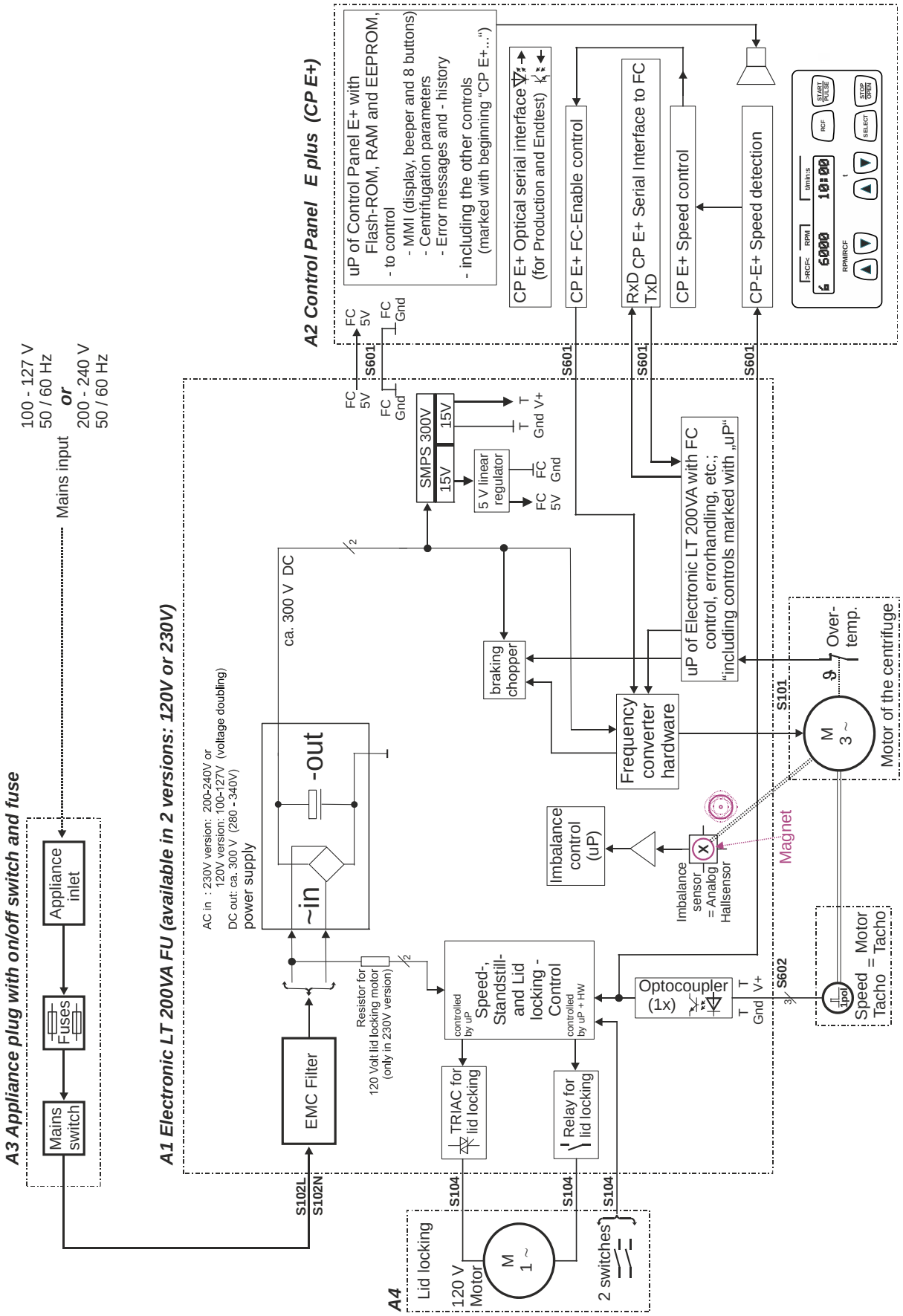

12.1.2 Block diagram EBA 200 S, HAEMATOKRIT 200, MIKRO 185

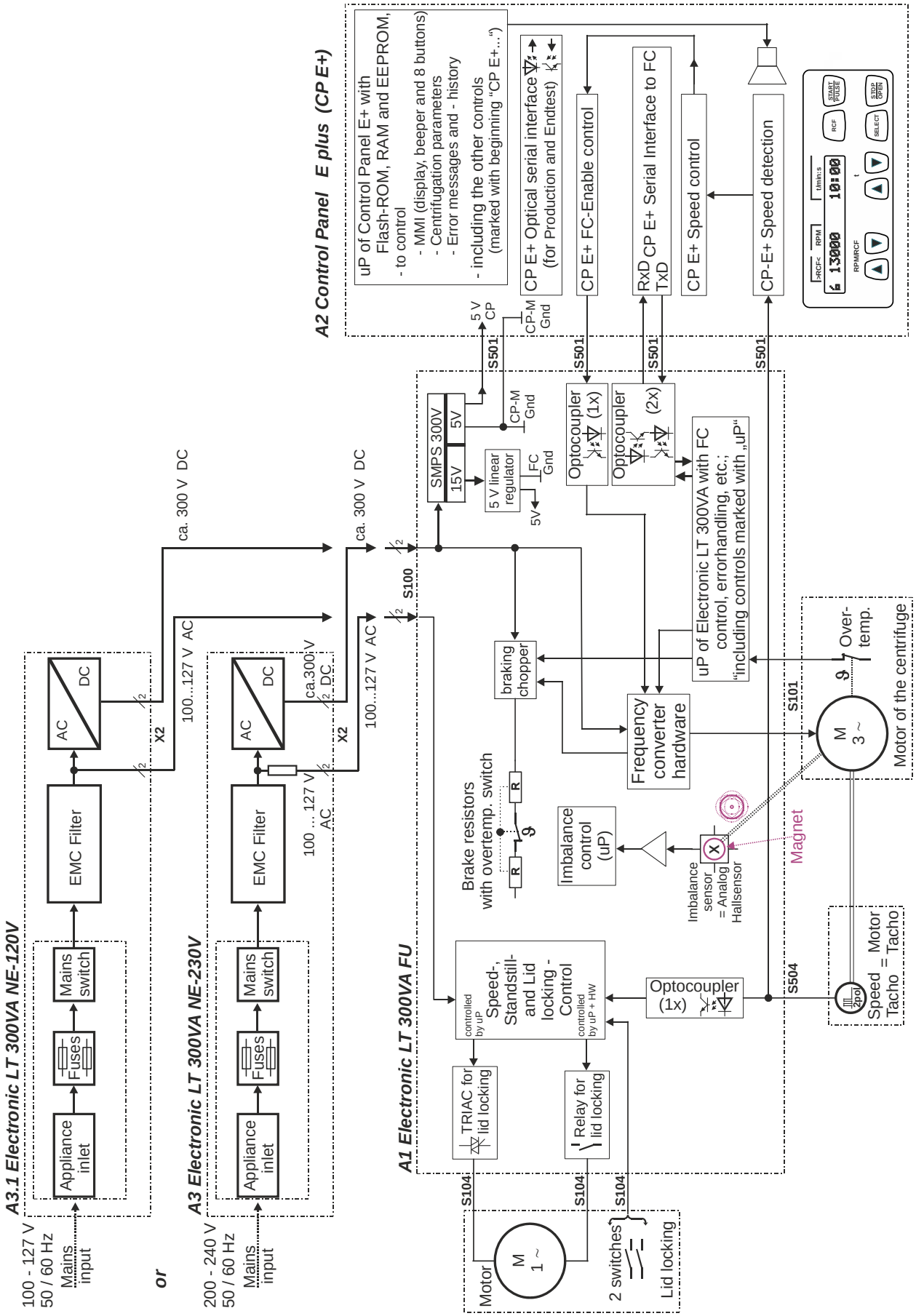

12.2 Connecting diagrams

12.2.1 Abbreviations of the cable colours

Abbreviation	Colour
BK	black
BN	brown
BU	blue
GD	gold
GN	green
GNYE	green-yellow
GY	grey
OG	orange
PK	pink
RD	red
SR	silver
TQ	turquoise
Transp.	transparent
VT	violet
WH	white
YE	yellow

12.2.2 Connecting diagram EBA 200

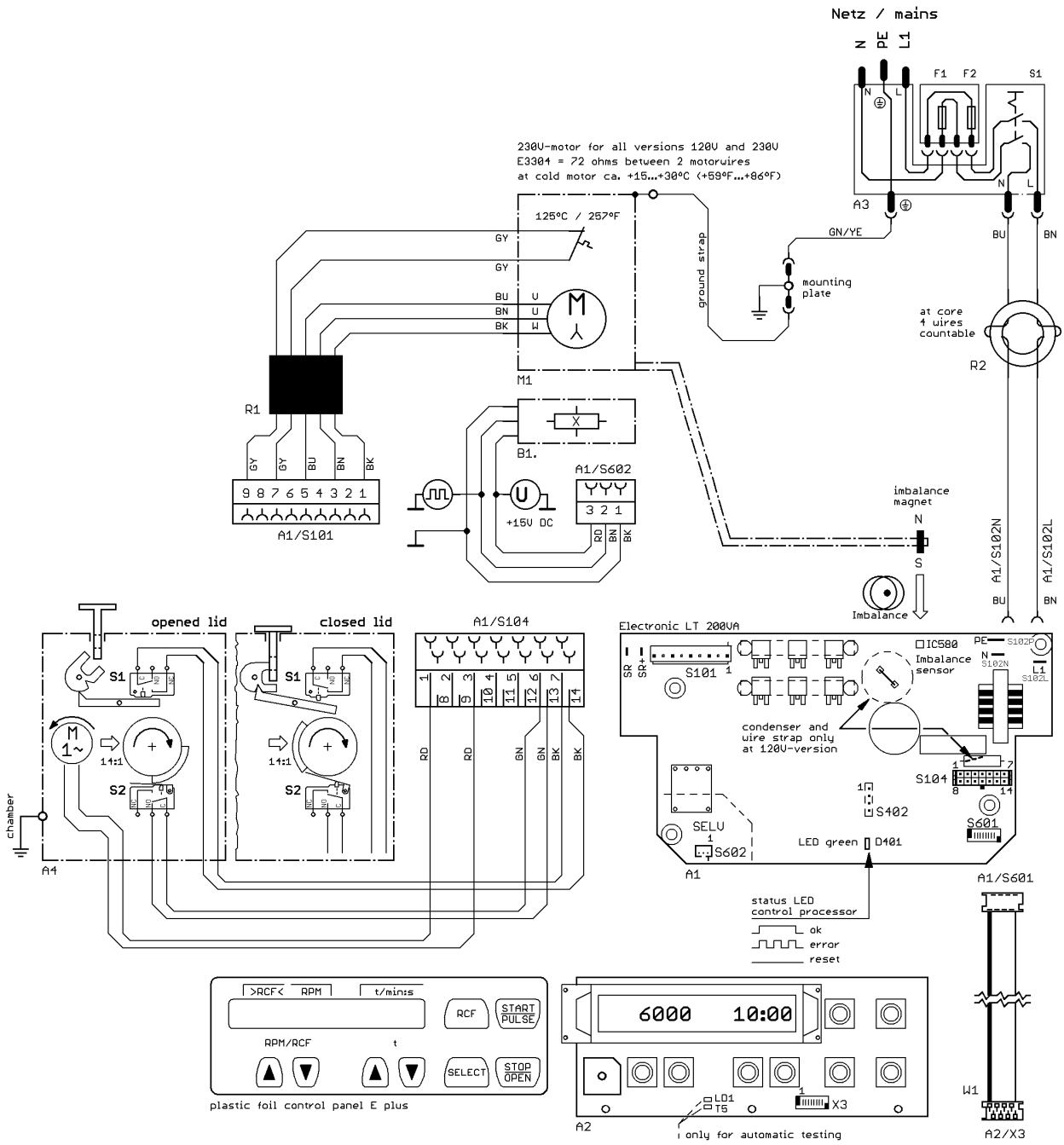

A1	electronic LT 200VA	Elektronik LT 200VA
A2	control panel E plus (LCD)	Steuerteil E plus (LCD)
A3	appliance inlet with on/off switch and fuse	Gerätestecker mit EIN-/AUS-Schalter und Gerätesicherung
A4	lid locking with motorized opening	Deckelverschluss mit motorischer Öffnung
B1	speed sensor	Drehzahlsensor
F1	fuse	Gerätesicherung
F2	fuse	Gerätesicherung
M1	motor of centrifuge	Motor der Zentrifuge
R1	interference coil motor	Entstördrossel Motor
R2	interference coil electronic LT 200VA	Entstördrossel Elektronik LT 200VA
S1	mains switch	Netzschalter
W1	flat cable to control panel	Flachbandleitung zum Steuerteil

Rev.: -

12.2.3 Connecting diagram EBA 200 S, HAEMATOKRIT 200, MIKRO 185

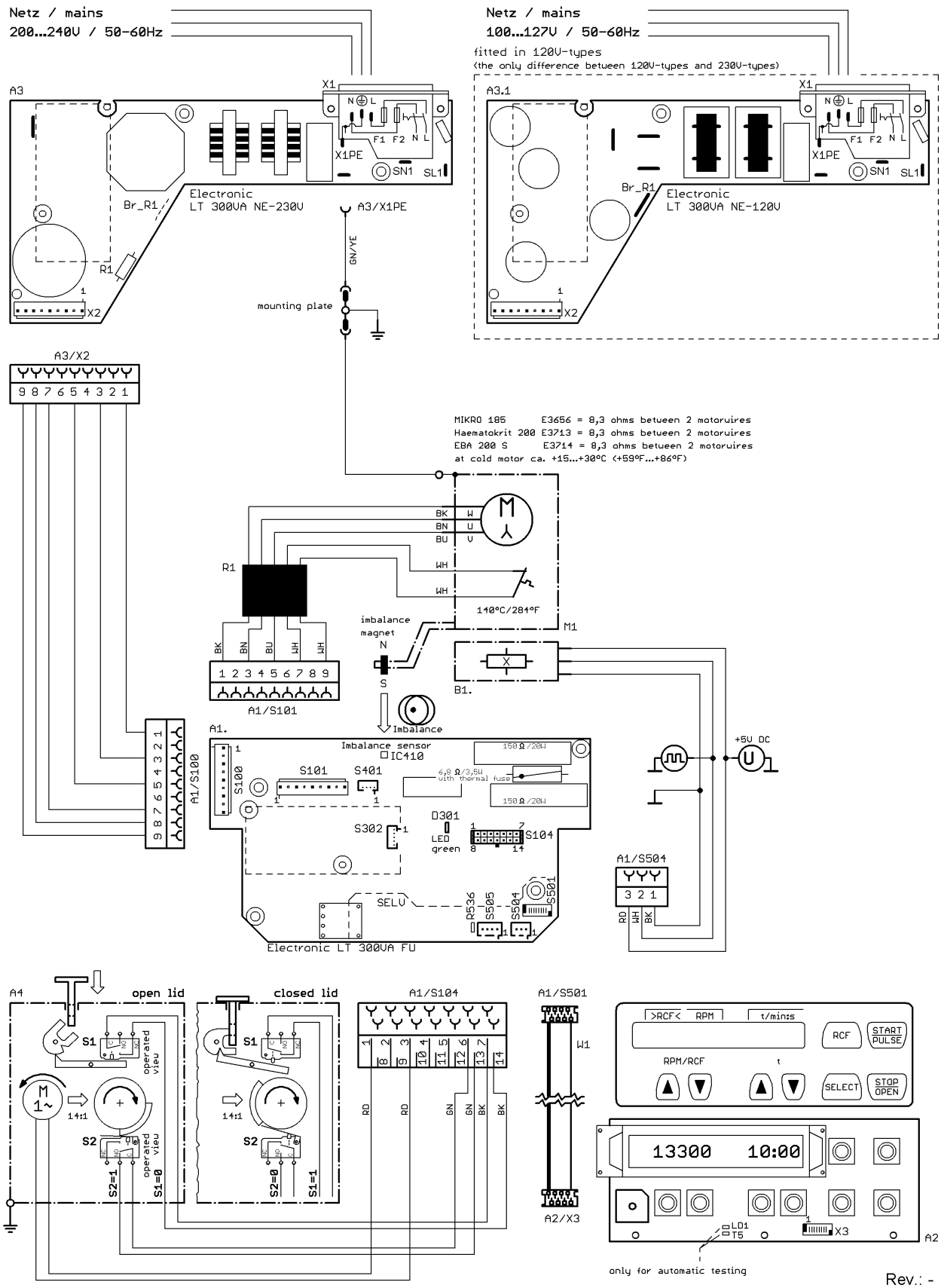

Table with the components, see next page.

A1	electronic LT 300VA FU	Elektronik LT 300VA FU
A2	control panel E plus (LCD)	Steuerteil E plus (LCD)
A3	electronic LT 300VA NE-230V	Elektronik LT 300VA NE-230V
A3.1	electronic LT 300VA NE-120V	Elektronik LT 300VA NE-120V
A4	lid locking with motorized opening	Deckelverschluss mit motorischer Öffnung
B1	speed sensor	Drehzahlsensor
F1	fuse	Gerätesicherung
F2	fuse	Gerätesicherung
M1	motor of centrifuge	Motor der Zentrifuge
R1	interference coil motor	Entstördrossel Motor
W1	flat cable to control panel	Flachbandleitung zum Steuerteil

Rev.: -

12.3 Technical specifications

12.3.1 Technical specifications EBA 200 / EBA 200 S

Manufacturer	Andreas Hettich GmbH & Co. KG D-78532 Tuttlingen			
Model	EBA 200		EBA 200 S	
Type	1800	1800-01	1802	1802-01
Mains voltage (± 10%)	200 - 240 V 1~	100 - 127 V 1~	200 - 240 V 1~	100 - 127 V 1~
Mains frequency	50 - 60 Hz-	50 - 60 Hz	50 - 60 Hz-	50 - 60 Hz
Connected load	100 VA	100 VA	160 VA	160 VA
Current consumption	0.5 A	1.0 A	0.75 A	1.5 A
Max. capacity	8 x 15 ml			
Allowed density	1.2 kg/dm^3			
Speed (RPM)	6000		8000	
Force (RCF)	3461		6153	
Kinetic energy	750 Nm		1750 Nm	
Obligatory inspection (BGR 500)	no			
Ambient conditions (EN / IEC 61010-1)				
– Set-up site	Indoors only			
– Altitude	Up to 2000 m above sea level			
– Ambient temperature	2°C to 40°C			
– Humidity	Maximum relative humidity 80% for temperatures up to 31°C, linearly decreasing to 50% relative humidity at 40°C.			
– Excess-voltage category (IEC 60364-4-443)	II			
– Pollution degree	2			
Device protection class	I			
Not suitable for use in explosion-endangered areas.				
EMC				
– Emitted interference, Interference immunity	EN / IEC 61326-1, Class B	FCC Class B	EN / IEC 61326-1, Class B	FCC Class B
Noise level (dependent on rotor)	≤ 50 dB(A)		≤ 55 dB(A)	
Dimensions				
– Width	261 mm			
– Depth	353 mm			
– Height	228 mm			
Weight	approx. 9 kg		approx. 11 kg	

12.3.2 Technical specifications HAEMATOKRIT 200

Manufacturer	Andreas Hettich GmbH & Co. KG D-78532 Tuttlingen	
Model	HAEMATOKRIT 200	
Type	1801	1801-01
Mains voltage (± 10%)	200 - 240 V 1~	100 - 127 V 1~
Mains frequency	50 - 60 Hz-	50 - 60 Hz-
Connected load	270 VA	270 VA
Current consumption	1.3 A	2.6 A
Max. capacity	24 x 2.2 ml	
Allowed density	1.2 kg/dm^3	
Speed (RPM)	13000	
Force (RCF)	16060	
Kinetic energy	950 Nm	
Obligatory inspection (BGR 500)	no	
Ambient conditions (EN / IEC 61010-1) – Set-up site – Altitude – Ambient temperature – Humidity – Excess-voltage category (IEC 60364-4-443) – Pollution degree	 Indoors only Up to 2000 m above sea level 2°C to 40°C Maximum relative humidity 80% for temperatures up to 31°C, linearly decreasing to 50% relative humidity at 40°C. II 2	
Device protection class	I	
Not suitable for use in explosion-endangered areas.		
EMC – Emitted interference, Interference immunity	EN / IEC 61326-1, Class B	FCC Class B
Noise level (dependent on rotor)	≤ 56 dB(A)	
Dimensions – Width – Depth – Height	 261 mm 353 mm 228 mm	
Weight	approx. 10 kg	

12.3.3 Technical specifications MIKRO 185

Manufacturer	Andreas Hettich GmbH & Co. KG D-78532 Tuttlingen	
Model	MIKRO 185	
Type	1203	1203-01
Mains voltage (± 10%)	200 - 240 V 1~	100 - 127 V 1~
Mains frequency	50 - 60 Hz	50 - 60 Hz
Connected load	390 VA	390 VA
Current consumption	1.8 A	3.6 A
Max. capacity	24 x 1.5 / 2.0 ml	
Allowed density	1.2 kg/dm^3	
Speed (RPM)	14000	
Force (RCF)	18845	
Kinetic energy	2450 Nm	
Obligatory inspection (BGR 500)	no	
Ambient conditions (EN / IEC 61010-1)		
– Set-up site	Indoors only	
– Altitude	Up to 2000 m above sea level	
– Ambient temperature	2°C to 40°C	
– Humidity	Maximum relative humidity 80% for temperatures up to 31°C, linearly decreasing to 50% relative humidity at 40°C.	
– Excess-voltage category (IEC 60364-4-443)	II	
– Pollution degree	2	
Device protection class	I	
Not suitable for use in explosion-endangered areas.		
EMC – Emitted interference, Interference immunity	EN / IEC 61326-1, Class B	FCC Class B
Noise level (dependent on rotor)	≤ 59 dB(A)	
Dimensions		
– Width	261 mm	
– Depth	353 mm	
– Height	228 mm	
Weight	approx. 11 kg	